MEAM 150

Fundamentals of Mechanical Prototyping

COMPUTER-NUMERICAL CONTROLLED MACHINING

© 2009, Jonathan Fiene, University of Pennsylvania

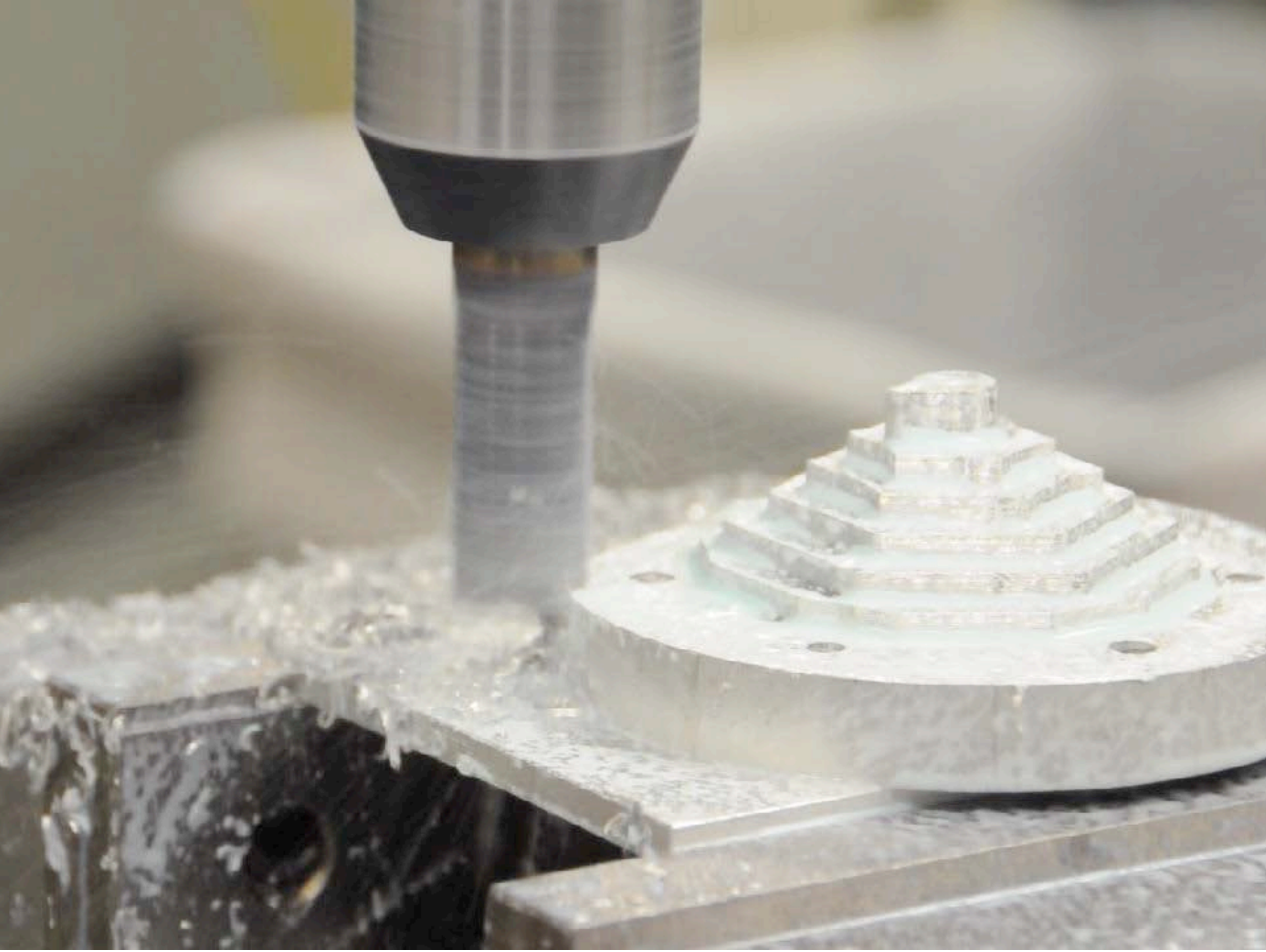

© 2009, Jonathan Fiene, University of Pennsylvania

CNC Machining

BENEFITS:

AUTOMATED

CUT COMPLEX SHAPES

REPEATABLE

DRAWBACKS:

EXPENSIVE

SETUP TIME

LIMITED AVAILABILITY

© 2009, Jonathan Fiene, University of Pennsylvania

MACHINING CENTER

FLOOD COOLANT

AUTO TOOL CHANGER

X16” x Y12” x Z10”

RETROFIT MILL

MANUAL COOLANT

MANUAL TOOL CHANGER

X31” x Y16” x Z23.5”

© 2009, Jonathan Fiene, University of Pennsylvania

THE PROTOTRAK RETROFIT MILL

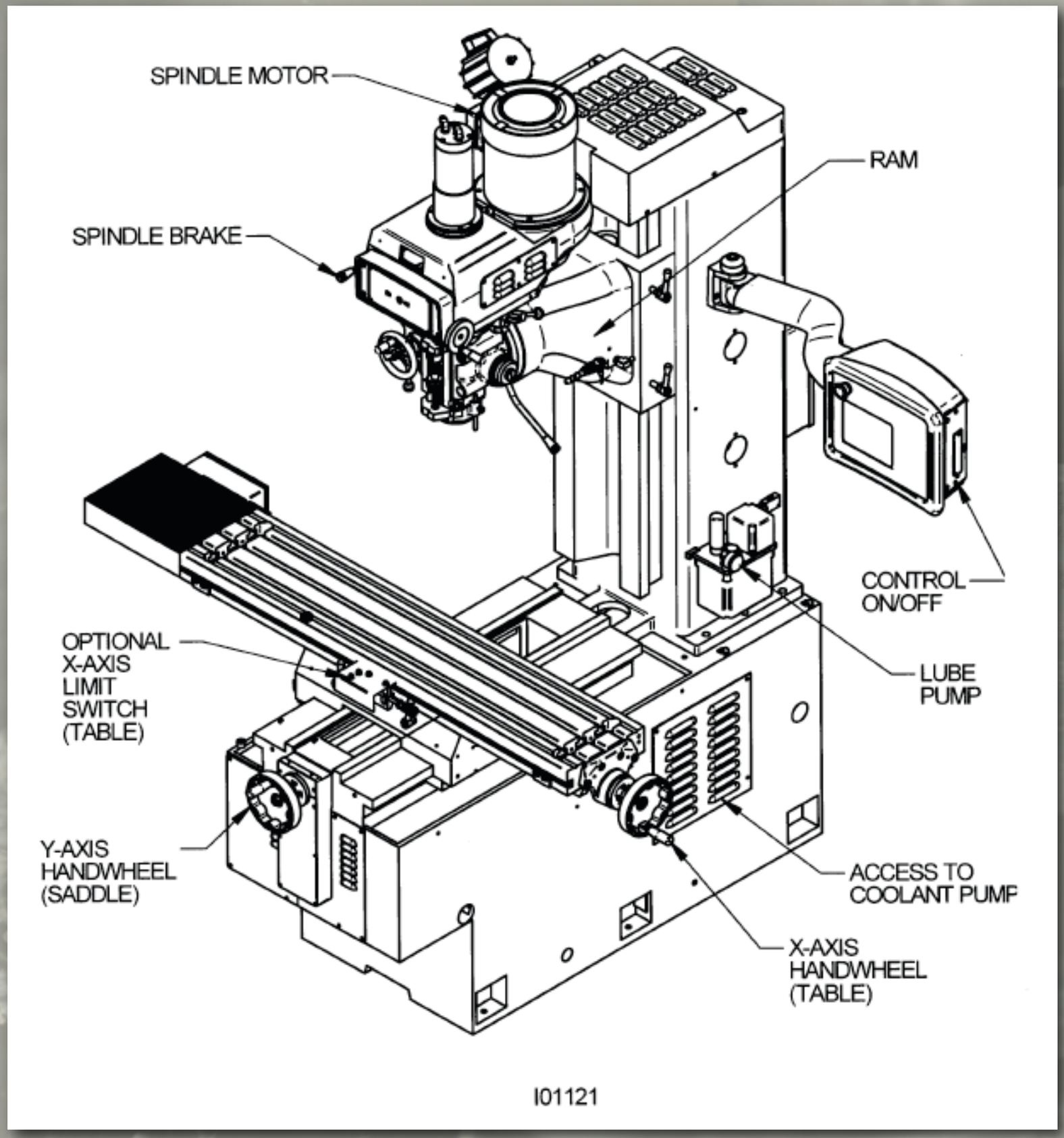

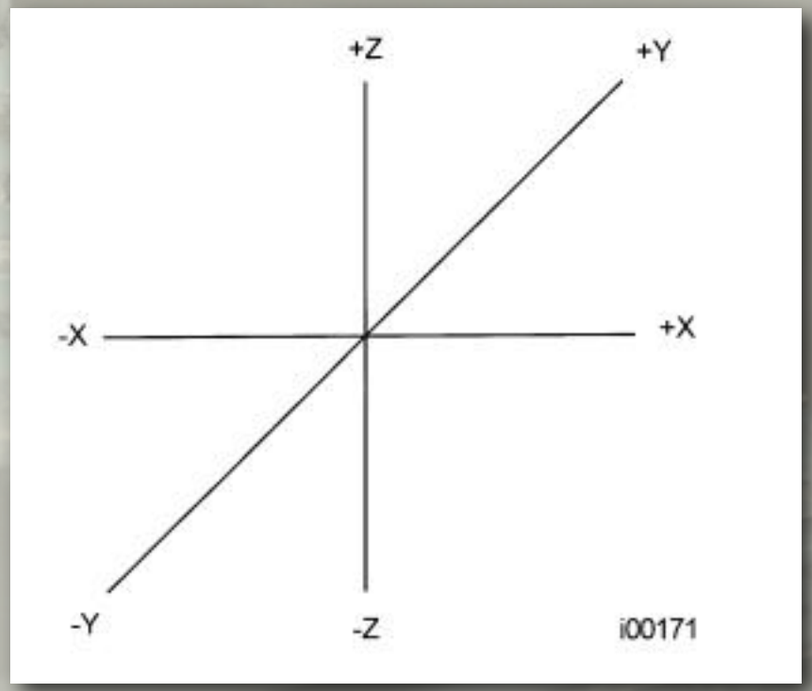

© 2009, Jonathan Fiene, University of Pennsylvania

THE CONTROLLER

© 2009, Jonathan Fiene, University of Pennsylvania

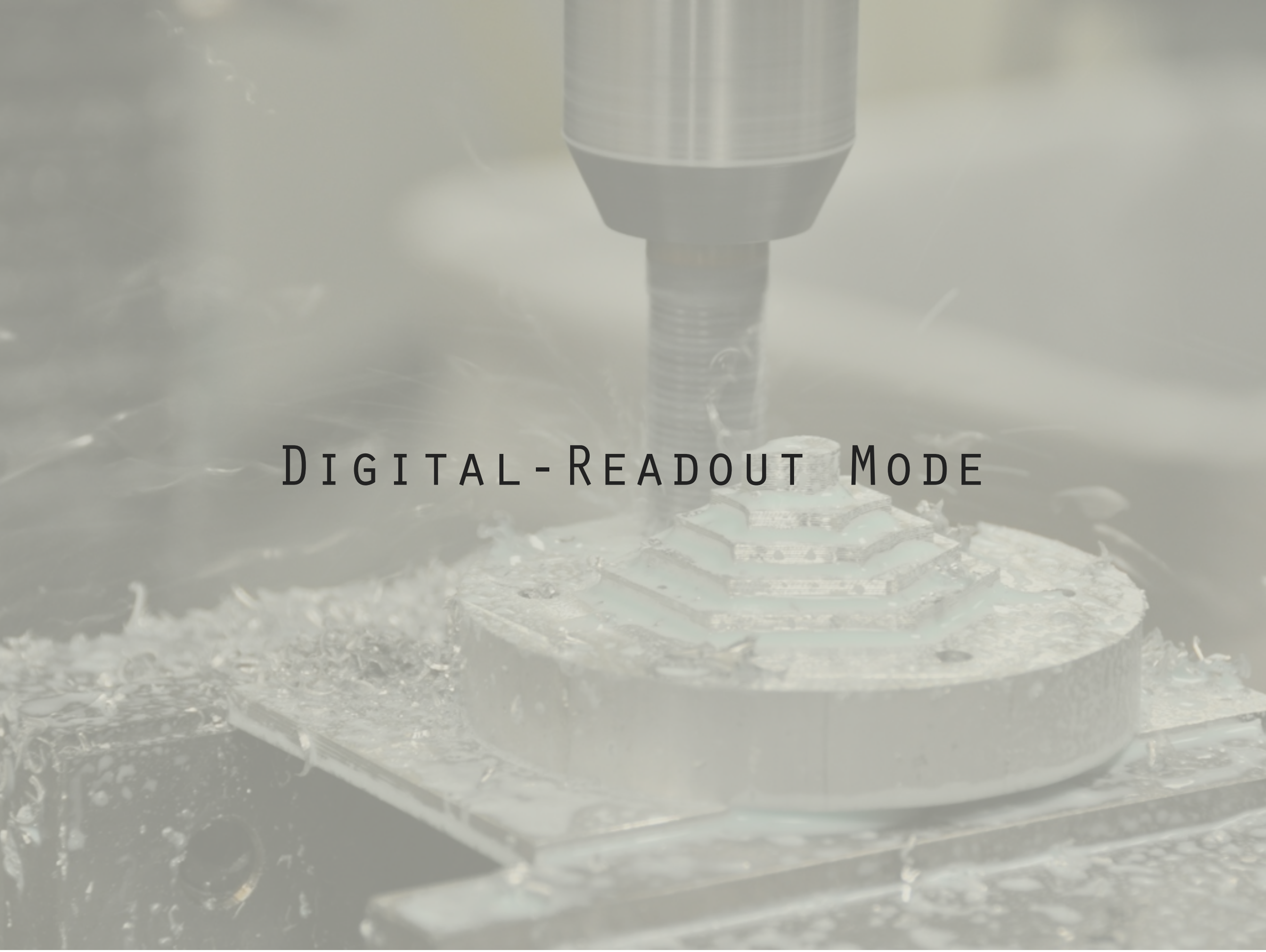

Digital-Readout Mode

© 2009, Jonathan Fiene, University of Pennsylvania

DRO MODE

3-AXIS

DIGITAL READOUT

JOG

POWER FEED

TO SET ABSOLUTE ZERO ON AN AXIS:

PRESS X, Y, OR Z, THEN ABS SET

TO SET INCREMENTAL ZERO ON AN AXIS:

PRESS X, Y, OR Z, THEN INC SET

TO PRESET AN AXIS:

PRESS X, Y, OR Z, ENTER NUMBER, THEN INC SET.

© 2009, Jonathan Fiene, University of Pennsylvania

DRO MODE

- 3-AXIS
- DIGITAL READOUT
- JOG
- POWER FEED

TO JOG:

- PRESS JOG KEY (MESSAGE WILL FLASH)
- CHECK "FEED RATE" BOX - SIGN = DIRECTION
- PRESS X, Y, OR Z TO JOG
- PRESS RETURN

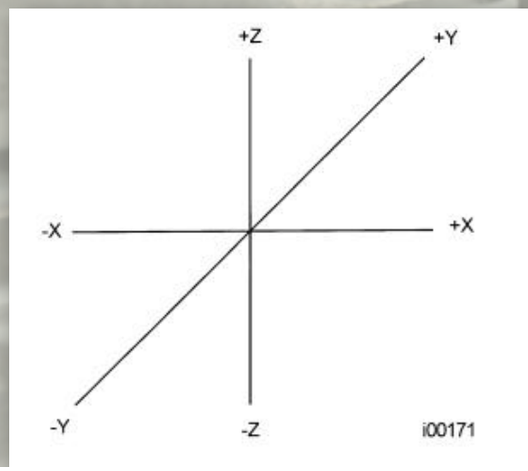

© 2009, Jonathan Fiene, University of Pennsylvania

DRO MODE

- 3-AXIS
- DIGITAL READOUT
- JOG
- POWER FEED

POWER FEED:

- PRESS POWER FEED KEY
- PRESS X, Y, OR Z
- ENTER THE DISTANCE TO MOVE, THEN INC SET
- PRESS GO
- RATE AUTO SETS TO 10 IPM

© 2009, Jonathan Fiene, University of Pennsylvania

DRO MODE

3-AXIS

DIGITAL READOUT

JOG

POWER FEED

DO ONE:

DO A SINGLE CNC OPERATION

GO TO (ONLY WORKS ON ELECTRONIC HANDWHEELS):

SETS A VIRTUAL STOP AT A GIVEN POINT

RETURN ABS 0:

MOVE THE TABLE AND RAM TO YOUR ABSOLUTE ZERO

SPIN SPEED:

PRESS SPIN SPEED, ENTER VALUE, PRESS SET

© 2009, Jonathan Fiene, University of Pennsylvania

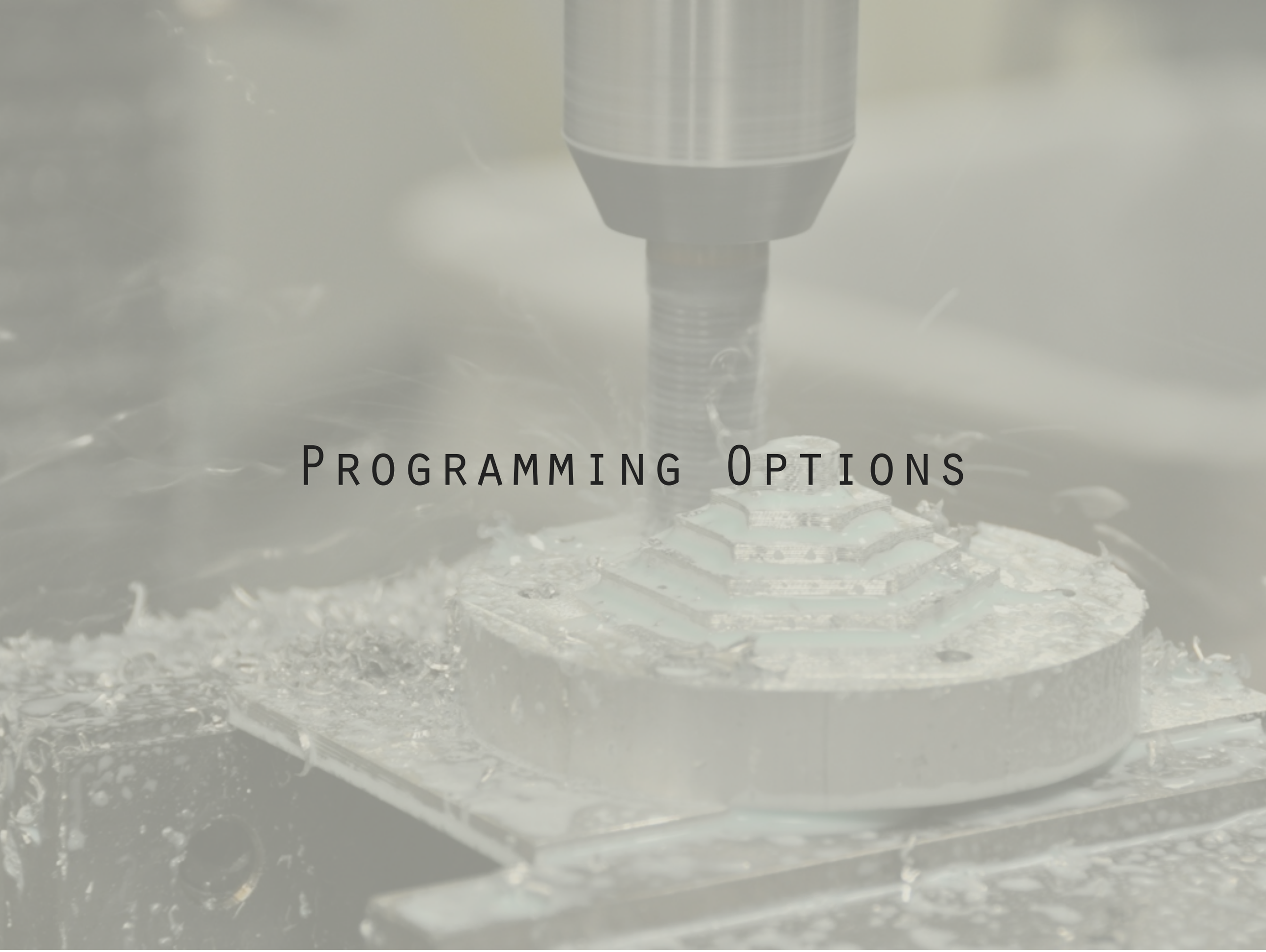

Programming Options

PROGRAMMING: 2 OPTIONS

CONVERSATIONAL PROGRAMMING @ THE MACHINE

- FASTER FOR SIMPLE OPERATIONS
- TIES UP THE MACHINE

CAD > CAM > MACHINE

- DEFINE MORE COMPLEX PARTS
- NEED TO LEARN THE SOFTWARE

© 2009, Jonathan Fiene, University of Pennsylvania

2.5D

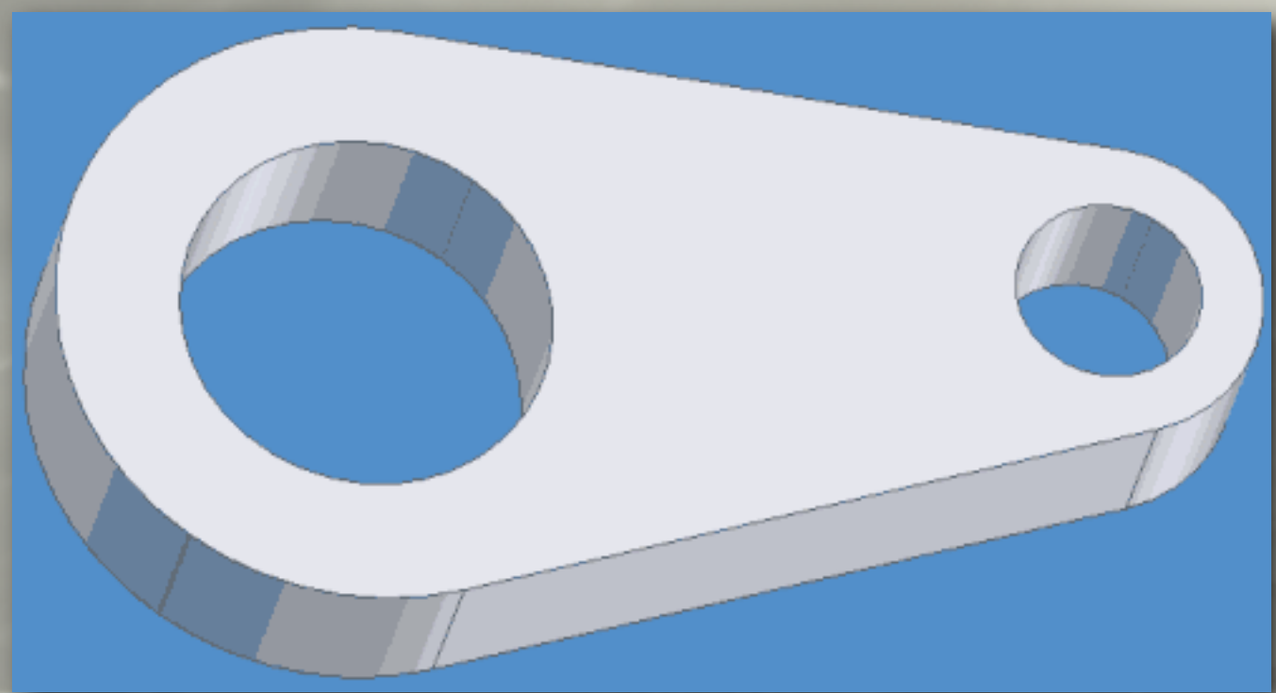

3D

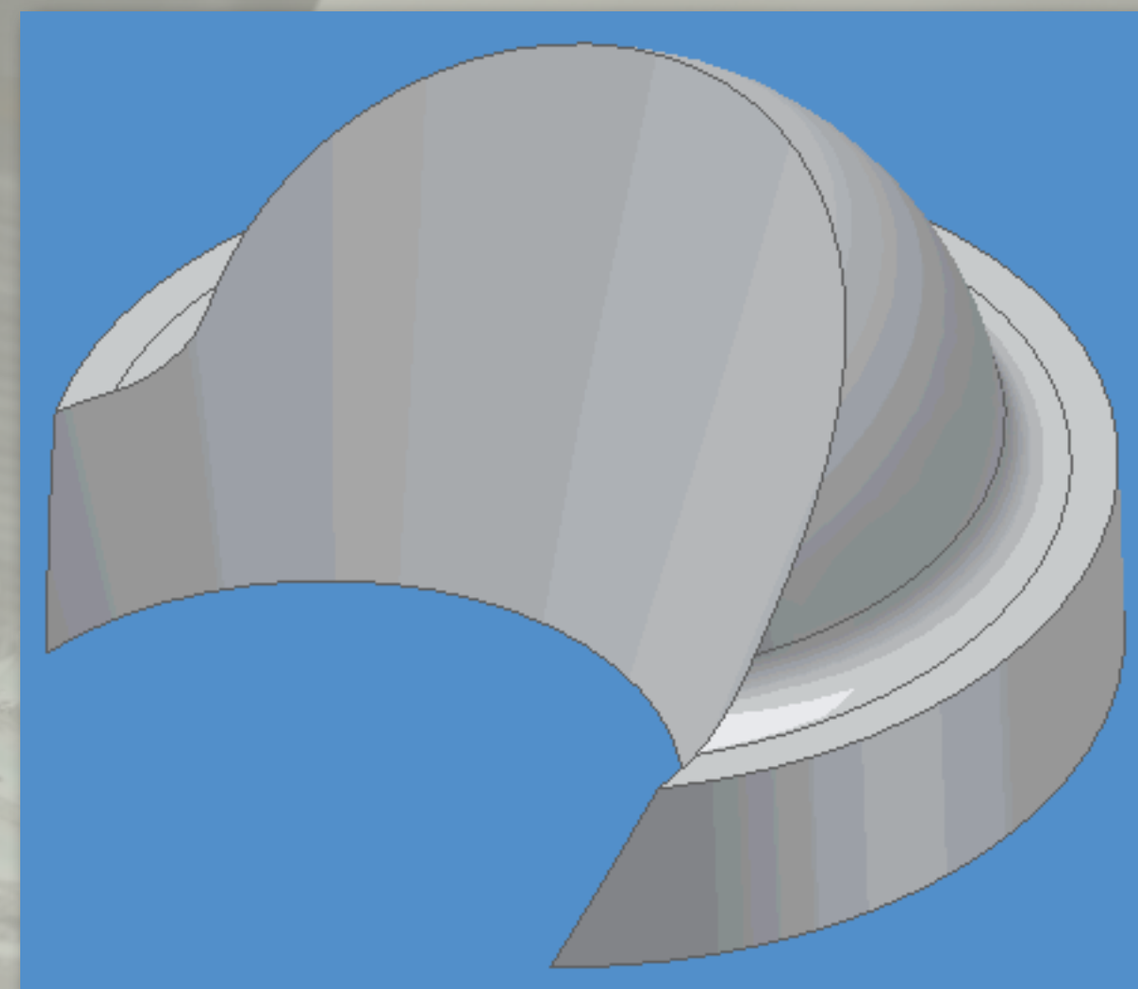

© 2009, Jonathan Fiene, University of Pennsylvania

PROGRAMMING 2.5D

© 2009, Jonathan Fiene, University of Pennsylvania

PROGRAM MODE

BASIC PROCEDURE

1. ENTER HEADER INFO
2. PROGRAM "EVENTS"
3. EXECUTE

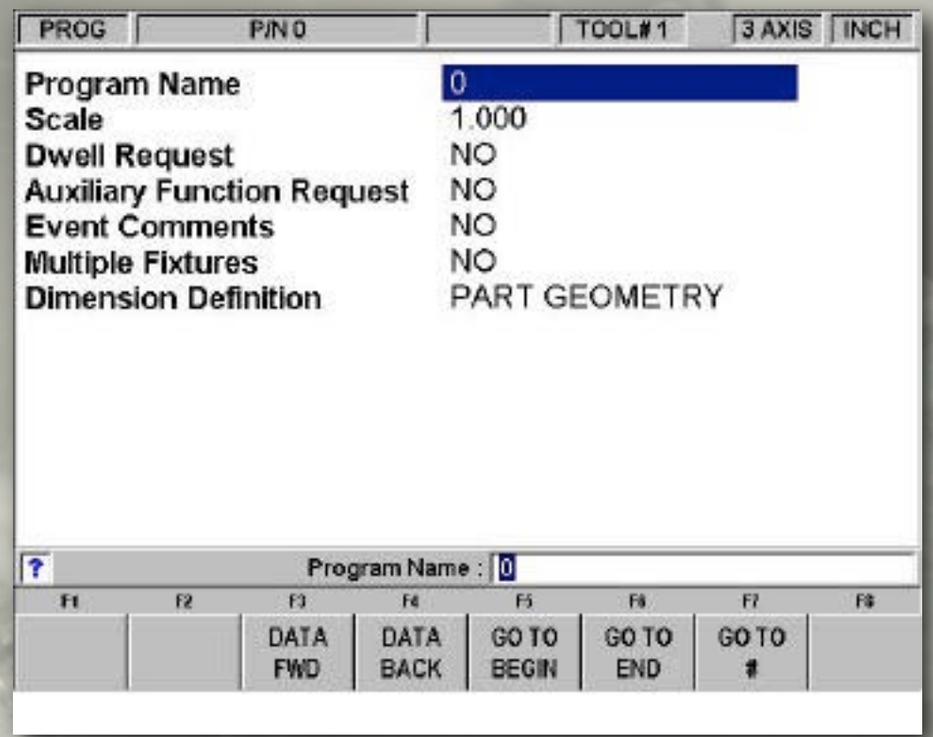

© 2009, Jonathan Fiene, University of Pennsylvania

ASSUMED INPUTS WHEN PROGRAMMING

TOOL OFFSET	EITHER 0 OR LAST USED
FEEDRATE	LAST USED
TOOL #	SAME AS LAST USED
# PECKS	1
CONRAD	0

© 2009, Jonathan Fiene, University of Pennsylvania

PROGRAMMING EVENTS

THE HEADER IS “EVENT 0”

TO MOVE TO THE NEXT EVENT, PRESS EITHER SET KEY

POSN

DRILL

BOLT HOLE

MILL

ARC

POCKET

PROFILE

© 2009, Jonathan Fiene, University of Pennsylvania

PROGRAMMING EVENTS

POSN

DRILL

BOLT HOLE

MILL

ARC

POCKET

PROFILE

© 2009, Jonathan Fiene, University of Pennsylvania

PROGRAMMING EVENTS

POSN

DRILL

BOLT HOLE

MILL

ARC

POCKET

PROFILE

© 2009, Jonathan Fiene, University of Pennsylvania

PROGRAMMING EVENTS

POSN

DRILL

BOLT HOLE

MILL

ARC

POCKET

PROFILE

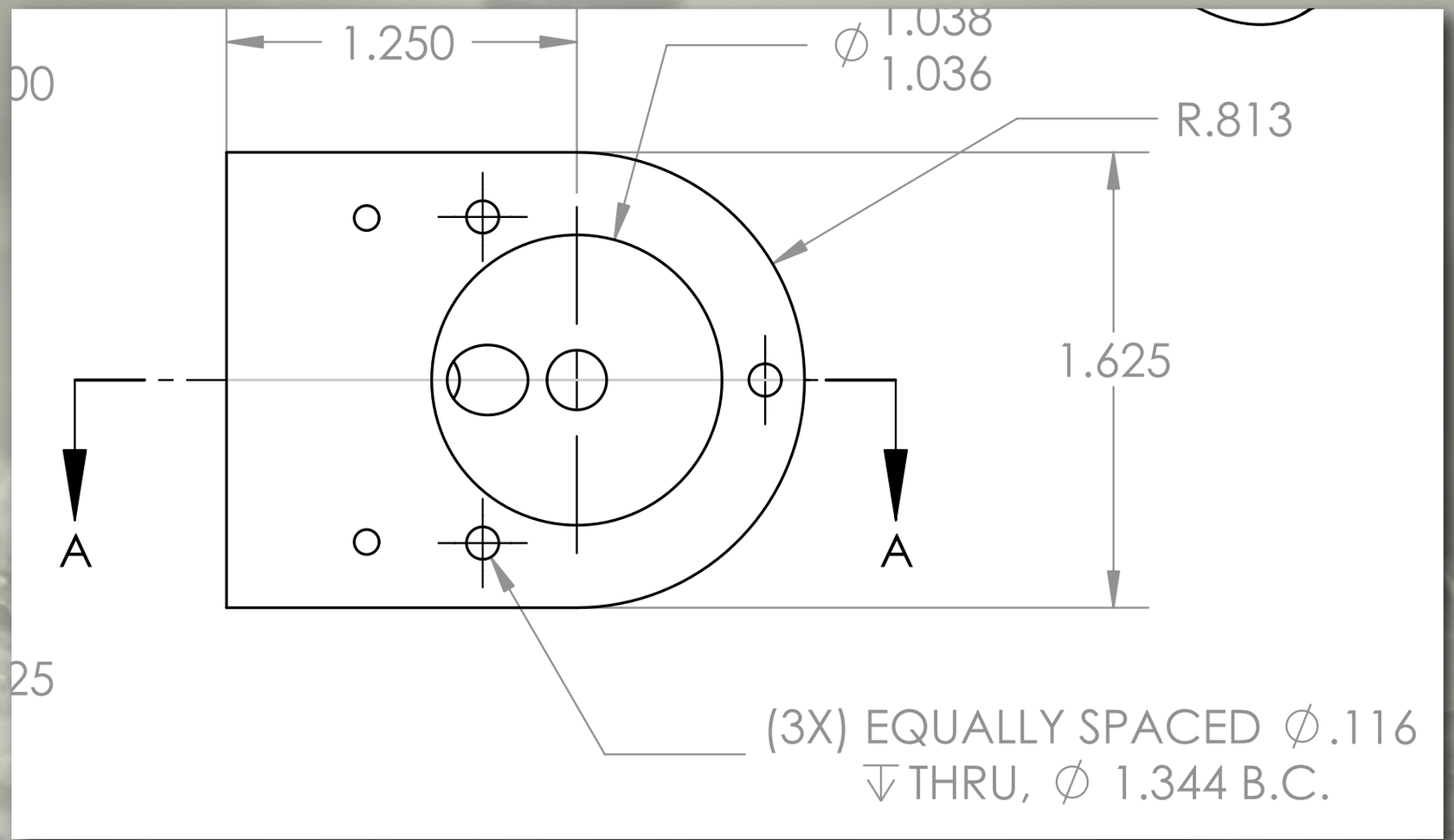

© 2009, Jonathan Fiene, University of Pennsylvania

PROGRAMMING EVENTS

POSN

DRILL

BOLT HOLE

MILL

ARC

POCKET

PROFILE

LEFT

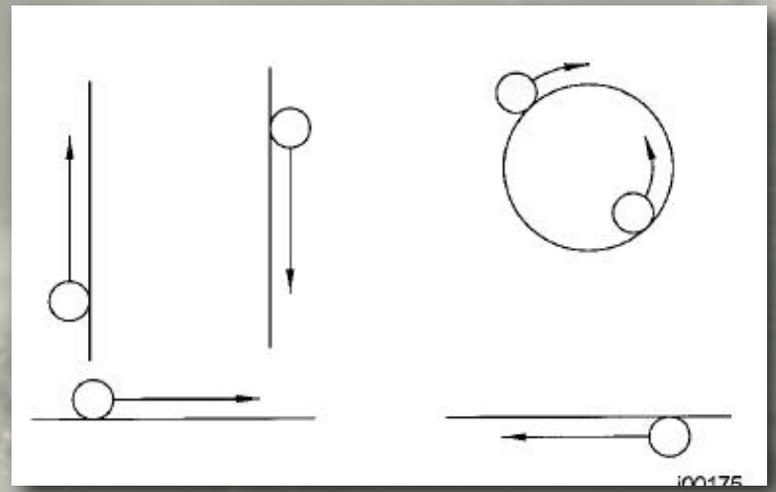

RIGHT

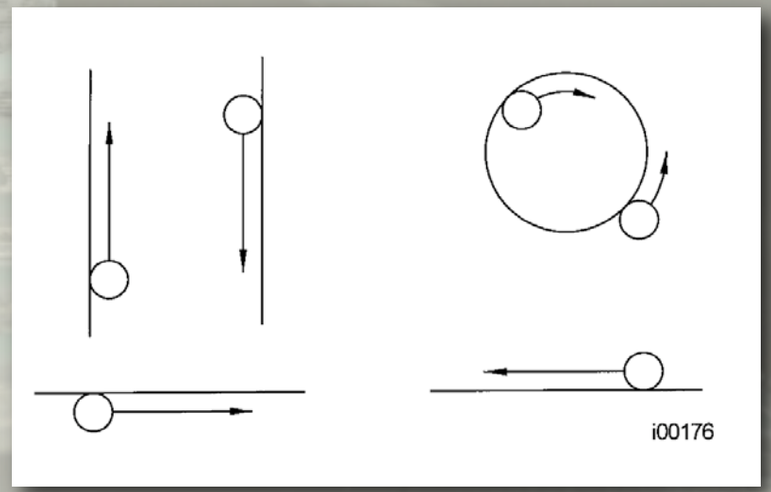

© 2009, Jonathan Fiene, University of Pennsylvania

PROGRAMMING EVENTS

POSN

DRILL

BOLT HOLE

MILL

ARC

POCKET

PROFILE

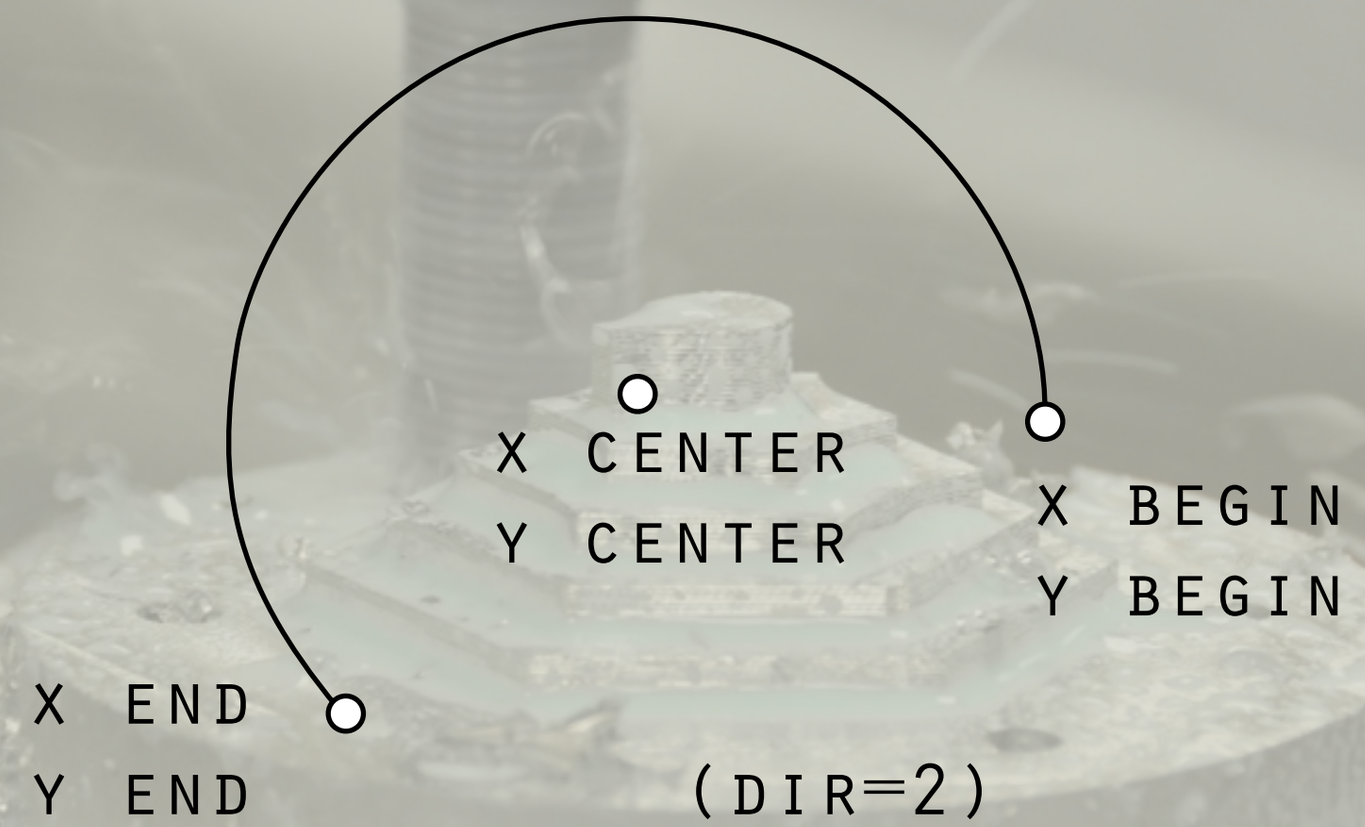

© 2009, Jonathan Fiene, University of Pennsylvania

PROGRAMMING EVENTS

POSN

DRILL

BOLT HOLE

MILL

ARC

POCKET

PROFILE

CUTS AN INTERIOR CIRCULAR, RECTANGULAR, OR IRREGULAR POCKET WITH AN OPTIONAL FINISH PASS

© 2009, Jonathan Fiene, University of Pennsylvania

PROGRAMMING EVENTS

POSN

DRILL

BOLT HOLE

MILL

ARC

POCKET

PROFILE

CUTS AN EXTERIOR CIRCULAR, RECTANGULAR, OR IRREGULAR PROFILE WITH AN OPTIONAL FINISH PASS

© 2009, Jonathan Fiene, University of Pennsylvania

LOOK

PROTO TRAK SMX
PROG
P/N 080701
3 AXIS
INCH
Y
Z
X
F1 ADJUST VIEW
F2 FIT DRAW
F3 LIST STEP
F4 START EVT#
F5 XY
F6 YZ
F7 XZ
F8 3D
FEED
GO
STOP
OVERRIDE
F
S
ACCESSORY
ON
AUTO
INC SET
ABS SET
inc/abs
in/mm
LOOK
MODE
X
Y
Z
7
8
9
4
5
6
1
2
3
+/-
0
.
RESTORE
SYS
HELP
BACK
SOUTHWESTERN INDUSTRIES

SET UP MODE

PROTO TRAK SMX
FEED
GO
STOP
OVERRIDE
F
S
ACCESSORY
ON
AUTO
F
C
INC SET
ABS SET
SYS
inc/abs
in/mm
LOOK
X
Y
Z
7
8
9
4
5
6
1
2
3
+/-
0
.
RESTORE
MODE
HELP
BACK
SOUTHWESTERN INDUSTRIES
ProtoTRAK SMX
Version - 2.04 (012706.09 5444)
OPTIONS:
ADVANCED FEATURES YES
NETWORK / MEMORY YES
PROGRAMMABLE E HEAD YES
NO
Select a mode
F1 F2 F3 F4 F5 F6 F7 F8
DRO
PROG
EDIT
SET-UP
RUN
PROG IN/OUT

TOOL TABLE

SET-UP | 3 AXIS | INCH

TOOL #	DIAMETER	Z OFFSET	Z MODIFIER	TOOL TYPE
REF		SET		
1	0.5000	-0.0100	0.0000	Rough End Mill
2	0.3750	-0.8255	0.0000	Finish End Mill
3	0.2500	-1.3320	0.0000	Drill
4	0.3750	-0.0200	0.0000	Drill
5	0.0000	-0.5568	0.0000	Tap
6	0.0000	0.0000	0.0000	
7	0.0000	0.0000	0.0000	
8	0.0000	0.0000	0.0000	
9	0.0000	0.0000	0.0000	
10	0.0000	0.0000	0.0000	
11	0.0000	0.0000	0.0000	
12	0.0000	0.0000	0.0000	
13	0.0000	0.0000	0.0000	
14	0.0000	0.0000	0.0000	
15	0.0000	0.0000	0.0000	

TOOL #1 DIAMETER : 0.5000

F1	F2	F3	F4	F5	F6	F7	F8
DATA DOWN	DATA UP	DATA LEFT	DATA RIGHT		ERASE TABLE	JOG	RETURN

© 2009, Jonathan Fiene, University of Pennsylvania

TOOL PATH

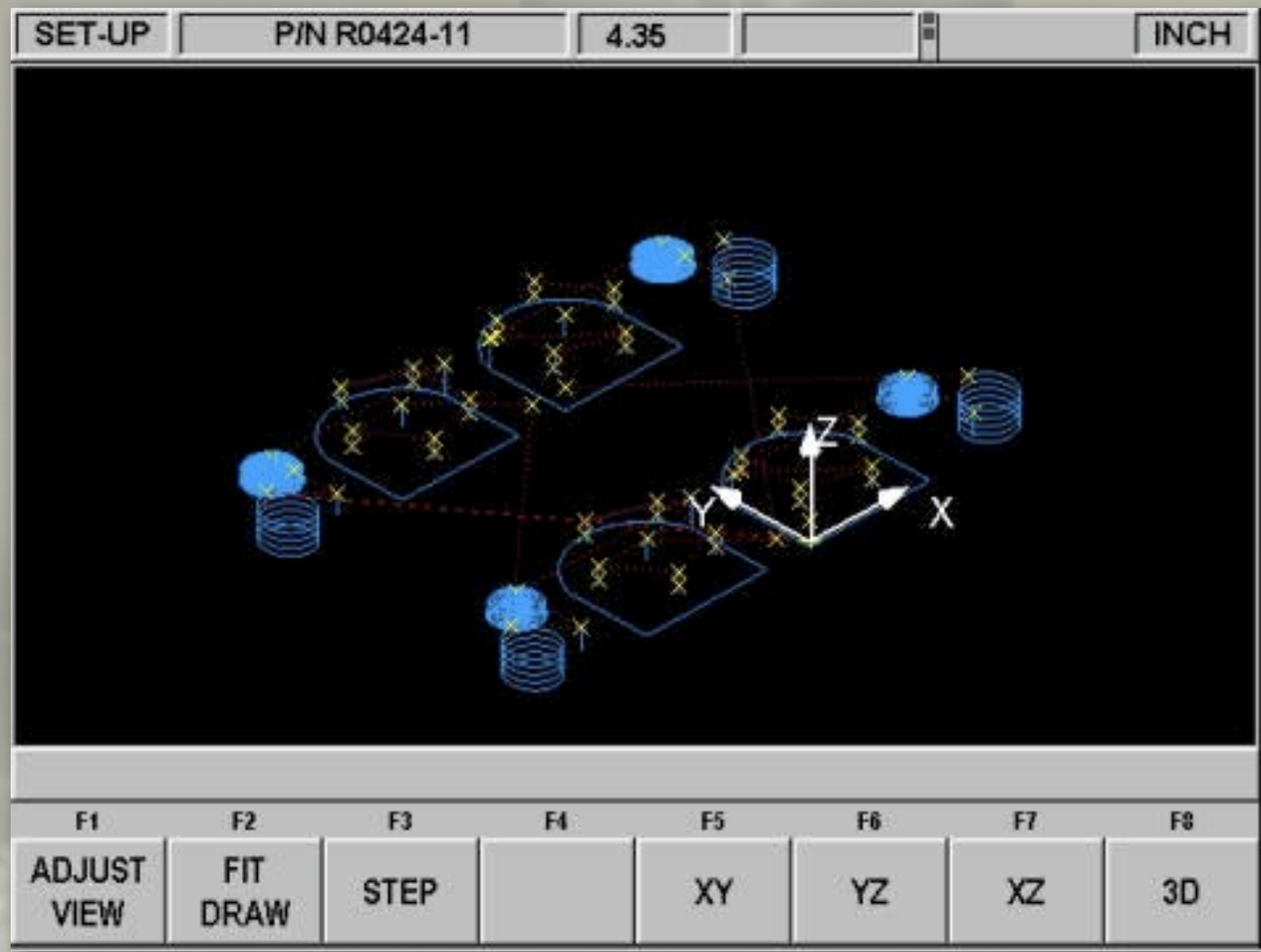

PROCESSES THE PROGRAM AND DISPLAYS TOOL PATHS

VERIFY PLAN

DISCOVER ERRORS!

© 2009, Jonathan Fiene, University of Pennsylvania

RUN MODE

PROTO TRAK SMX
FEED
GO
STOP
OVERRIDE
F
S
ACCESSORY
ON
AUTO
F
C
INC SET
ABS SET
SYS
SOUTHWESTERN INDUSTRIES
ProtoTRAK SMX
Version - 2.04 (012706.09 5444)
OPTIONS:
ADVANCED FEATURES YES
NETWORK / MEMORY YES
PROGRAMMABLE E HEAD YES
NO
Select a mode
inc/abs
in/mm
LOOK
X
Y
Z
7 8 9
4 5 6
1 2 3
+/- 0 .
RESTORE
MODE
HELP
BACK
F1 F2 F3 F4 F5 F6 F7 F8
DRO
PROG
EDIT
SET-UP
RUN
PROG IN/OUT
SOUTHWESTERN INDUSTRIES