Filters

Passive, Active, and Digital

Passive Filters

low pass	pass low frequencies
high pass	pass high frequencies
band pass	pass a band of frequencies
band stop	reject a band of frequencies
notch	reject a specific frequency

Passive low-pass filter

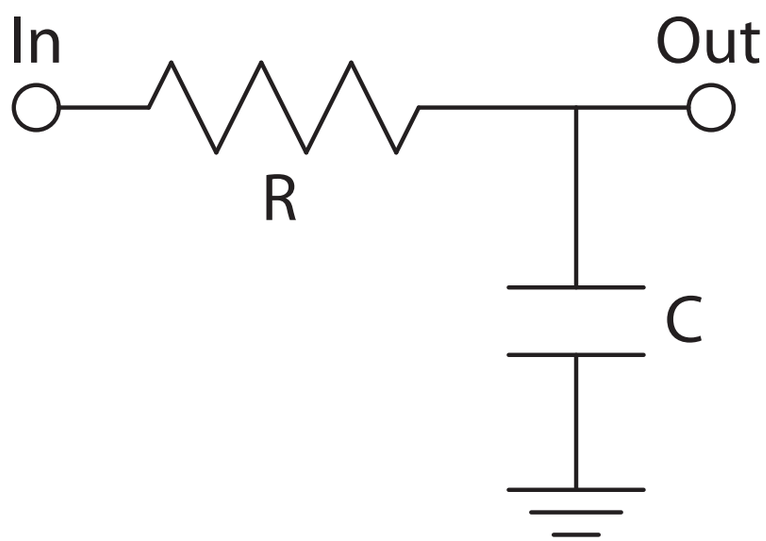

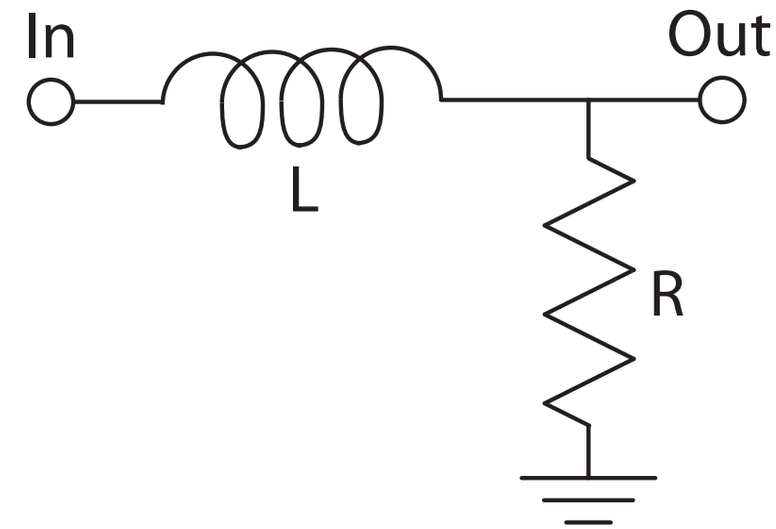

$$f_c = \frac{1}{2\pi RC}$$

$$f_c = \frac{1}{2\pi L/R}$$

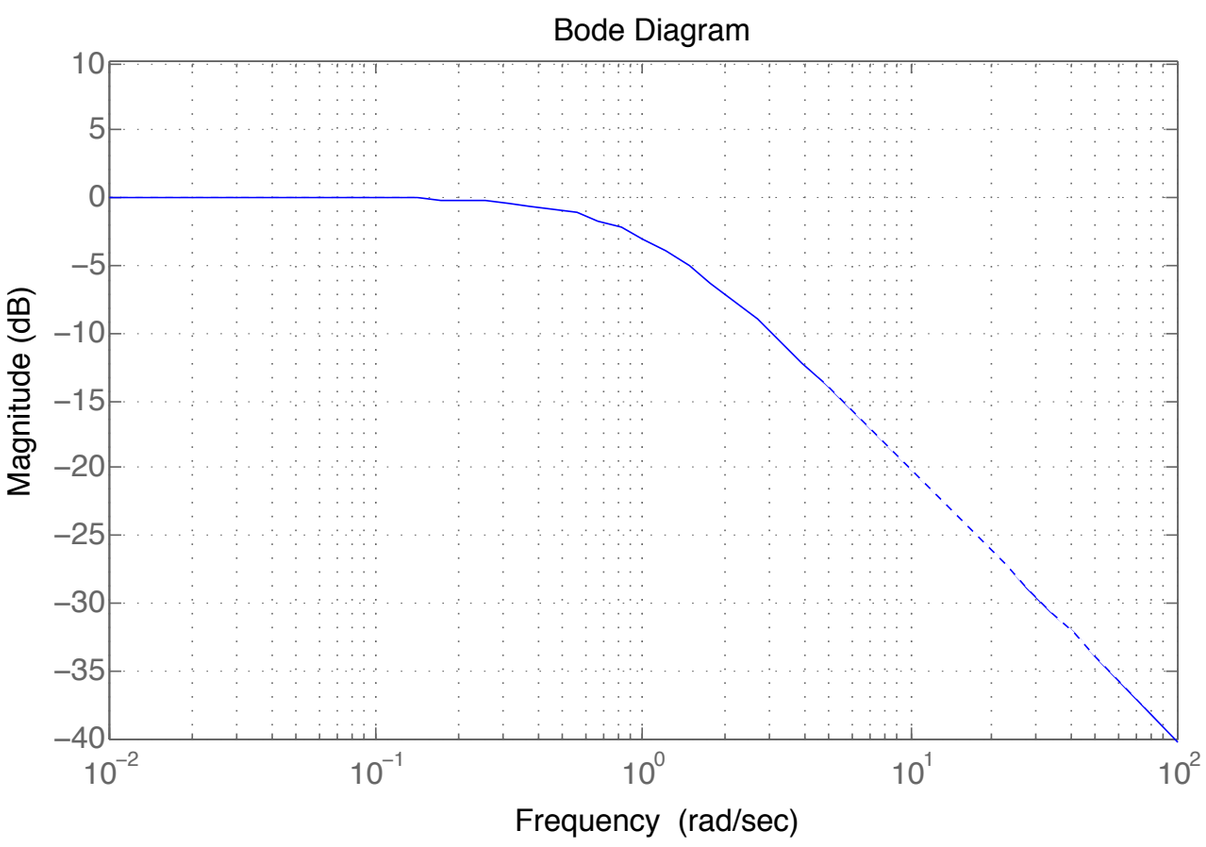

Low-frequency passes through

High-frequency is attenuated

70.7% response at the cutoff frequency

First-order response rolls off
at 20dB per decade

Passive high-pass filter

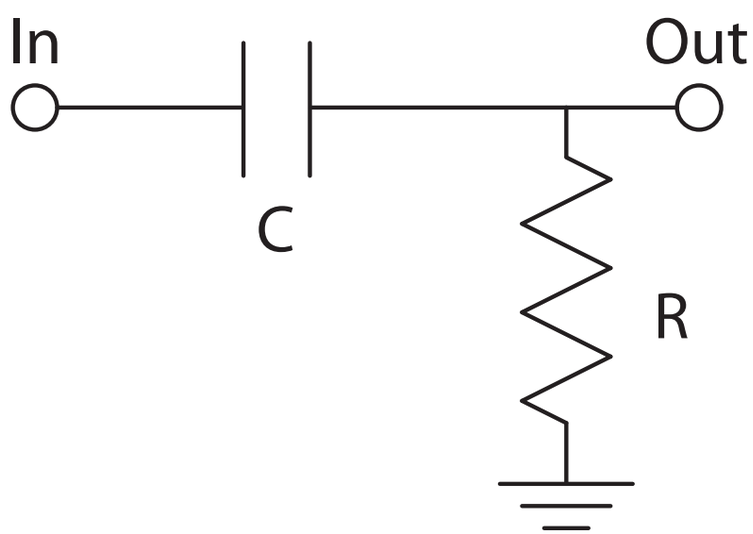

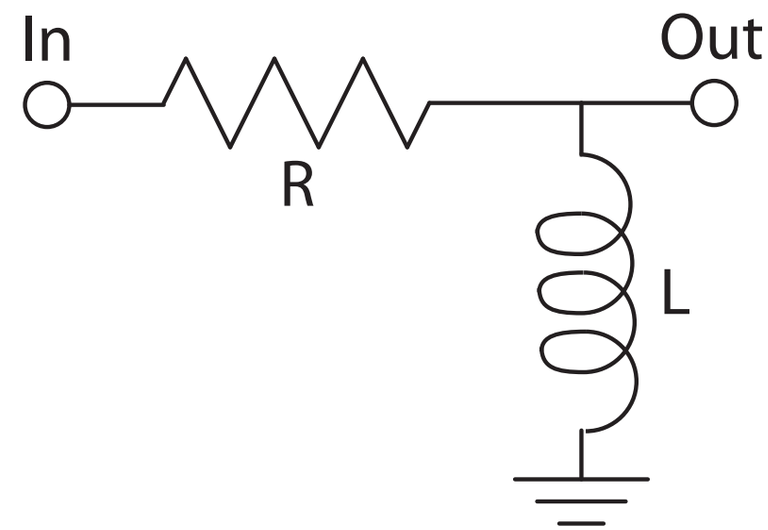

$$f_c = \frac{1}{2\pi RC}$$

$$f_c = \frac{1}{2\pi L/R}$$

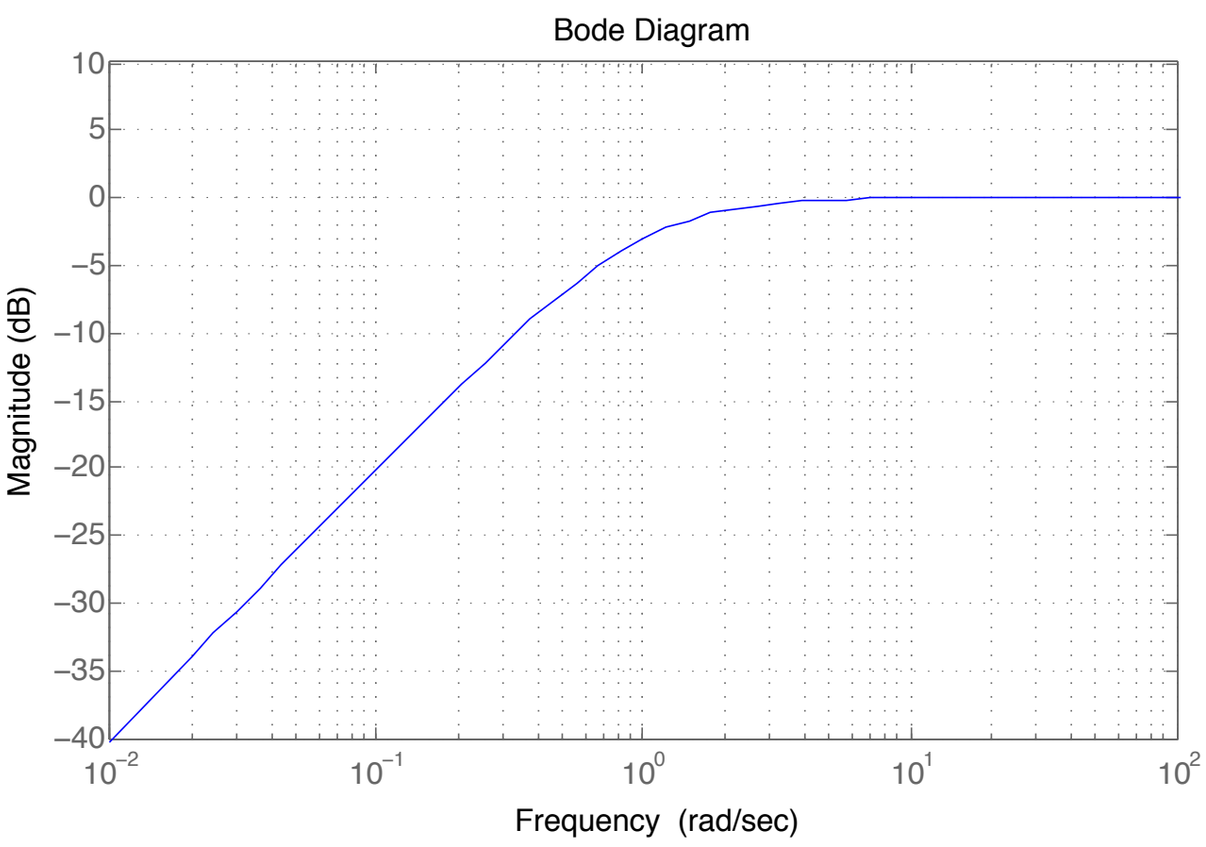

High-frequency passes through

Low-frequency is attenuated

70.7% response at the cutoff frequency

First-order response climbs
at 20dB per decade

Cascading passive filters

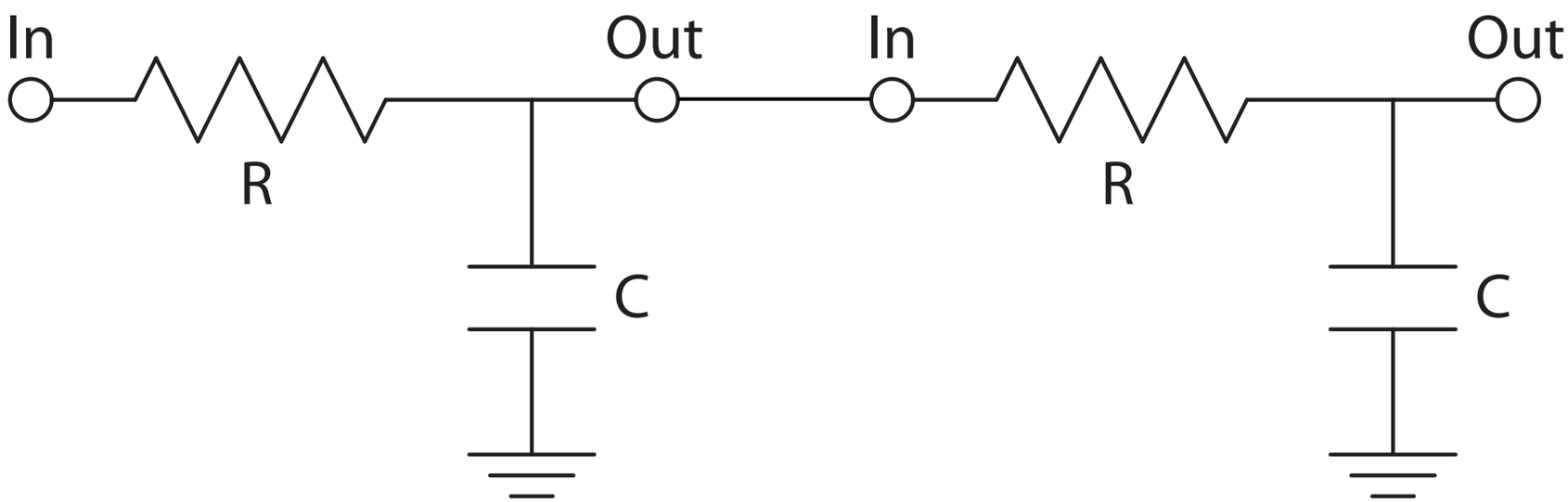

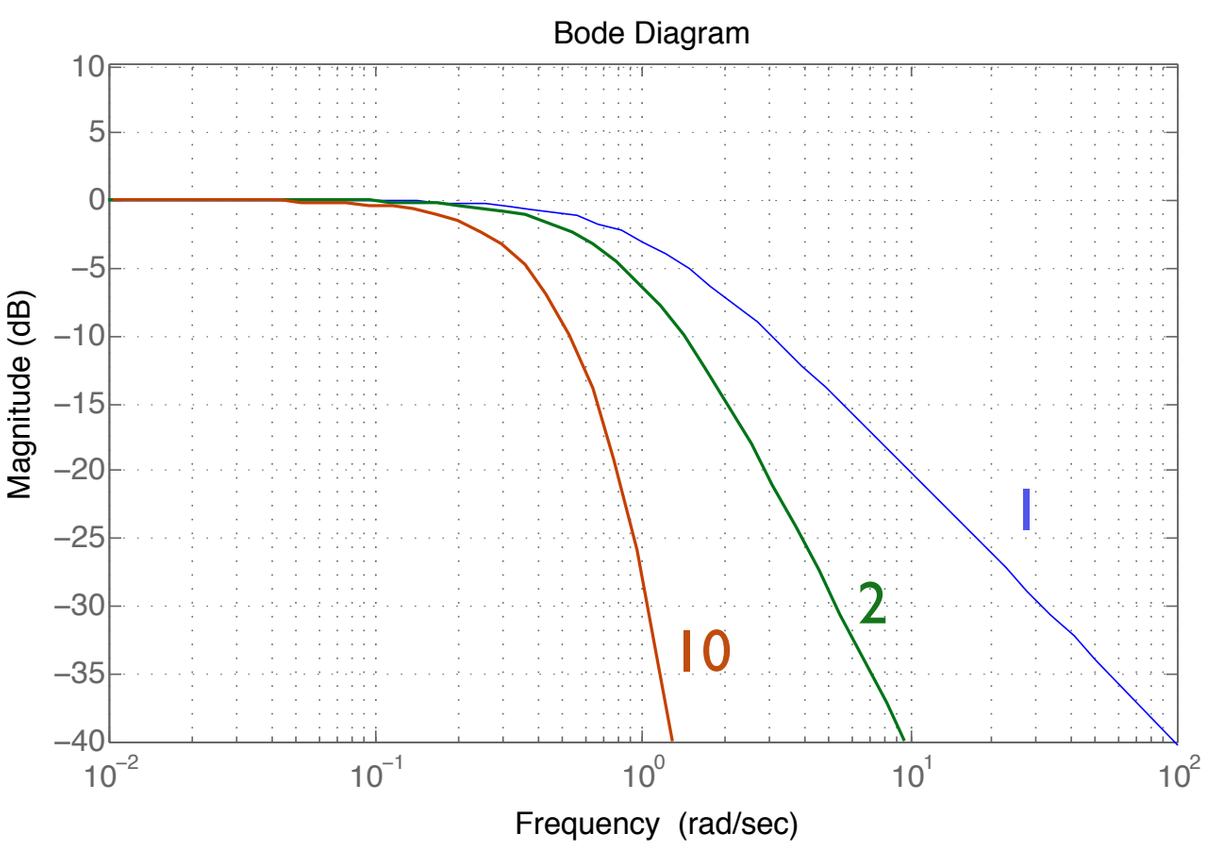

response should roll off at
n x 20dB per decade,
but...

Passive band-pass filter

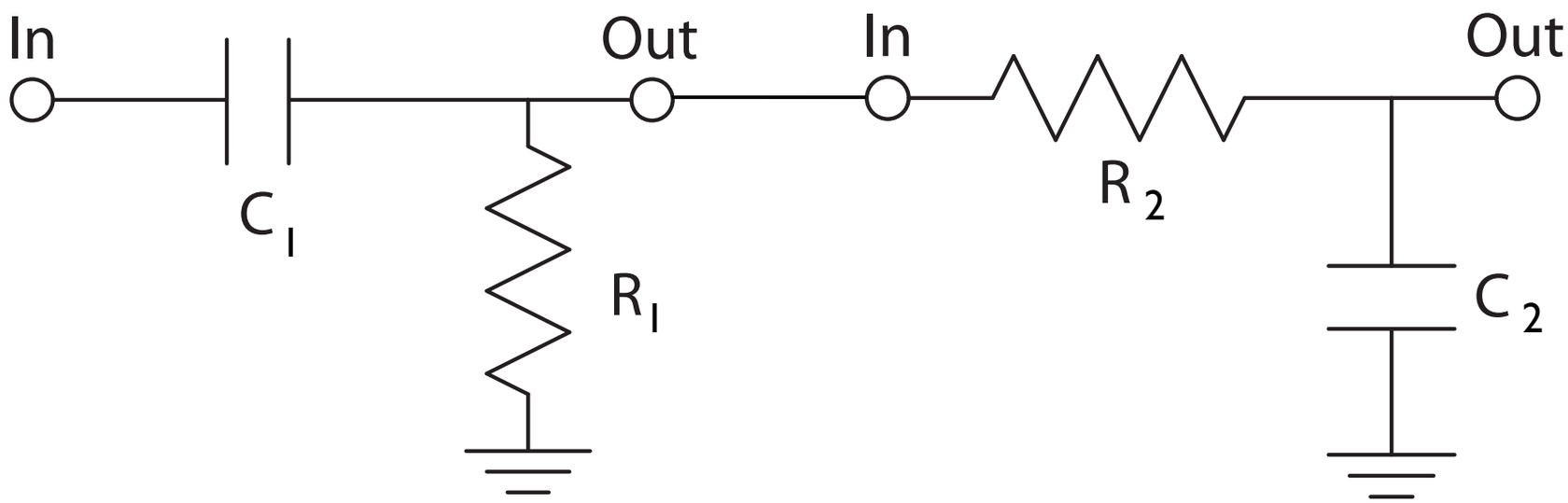

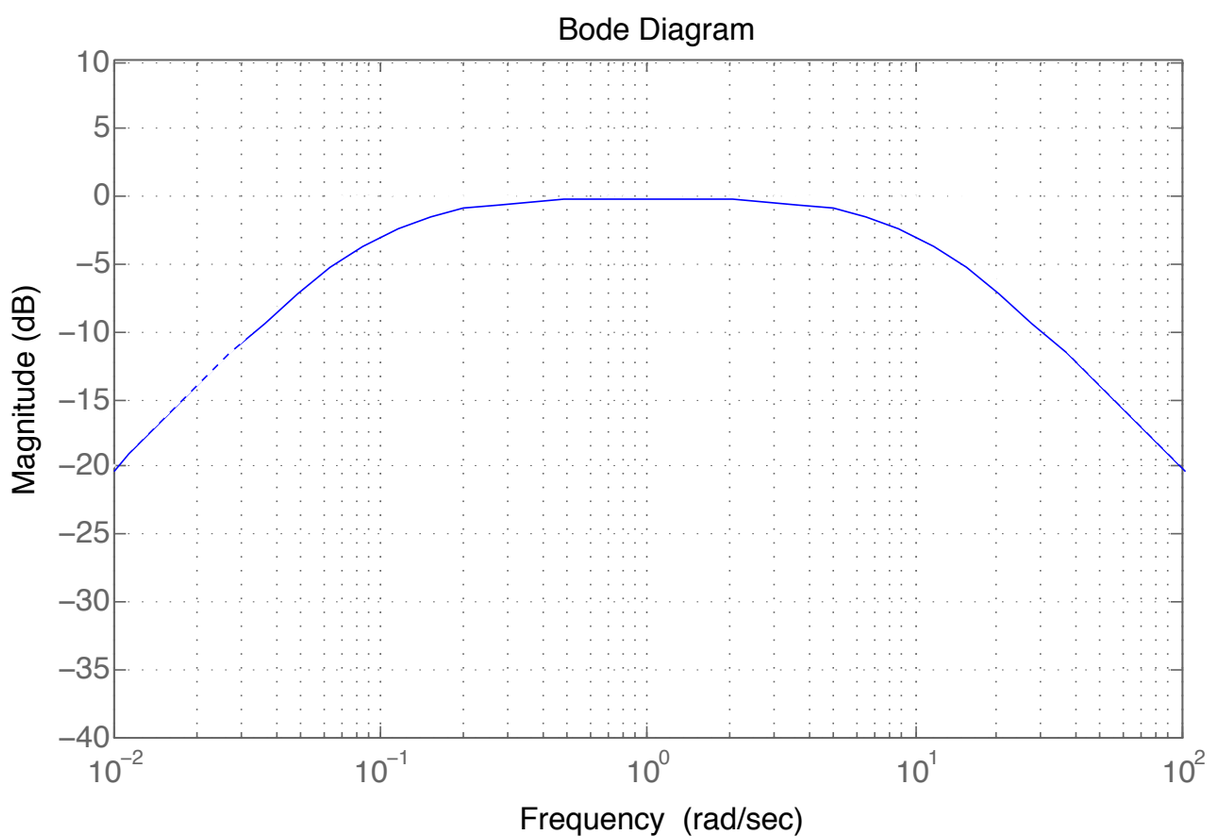

cascaded high and low pass

passes signals between the two corner frequencies

“Twin T” passive notch filter

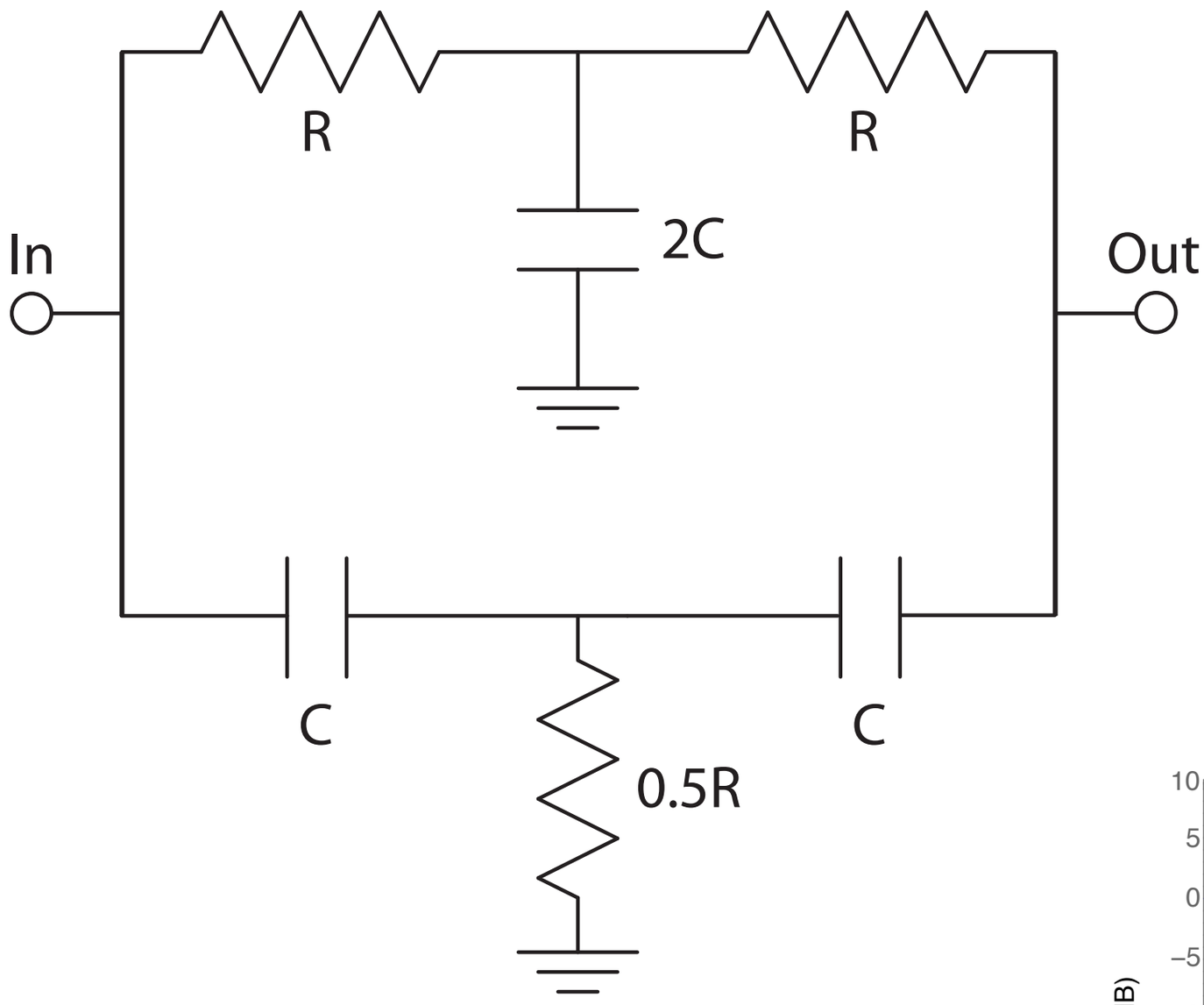

Targeted attenuation of a single frequency

For 60 Hertz, R~2.7k, C~1uF

$$f_c = \frac{1}{2\pi RC}$$

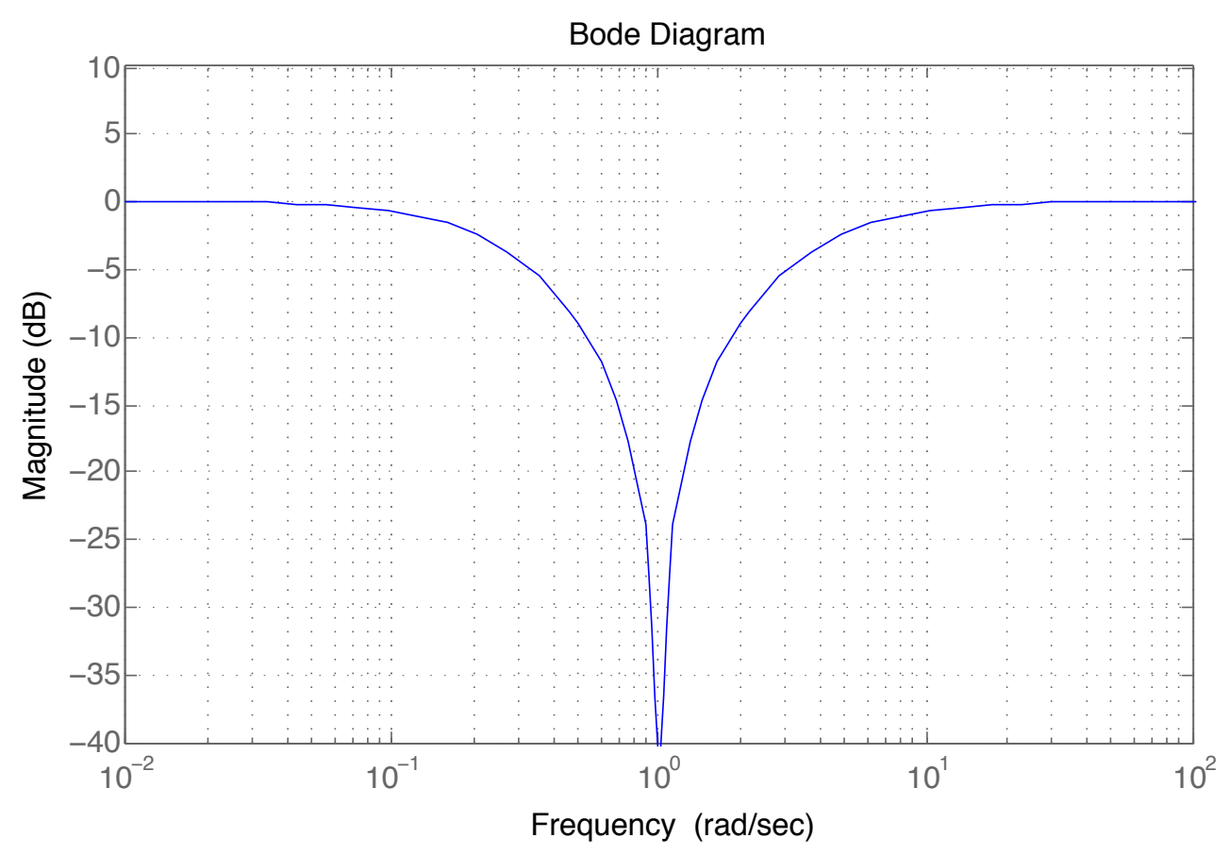

Active Filters

use op-amps to:

perform simultaneous amplification

perform simultaneous buffering

get full RLC effects without the need for inductors

Active low-pass filter

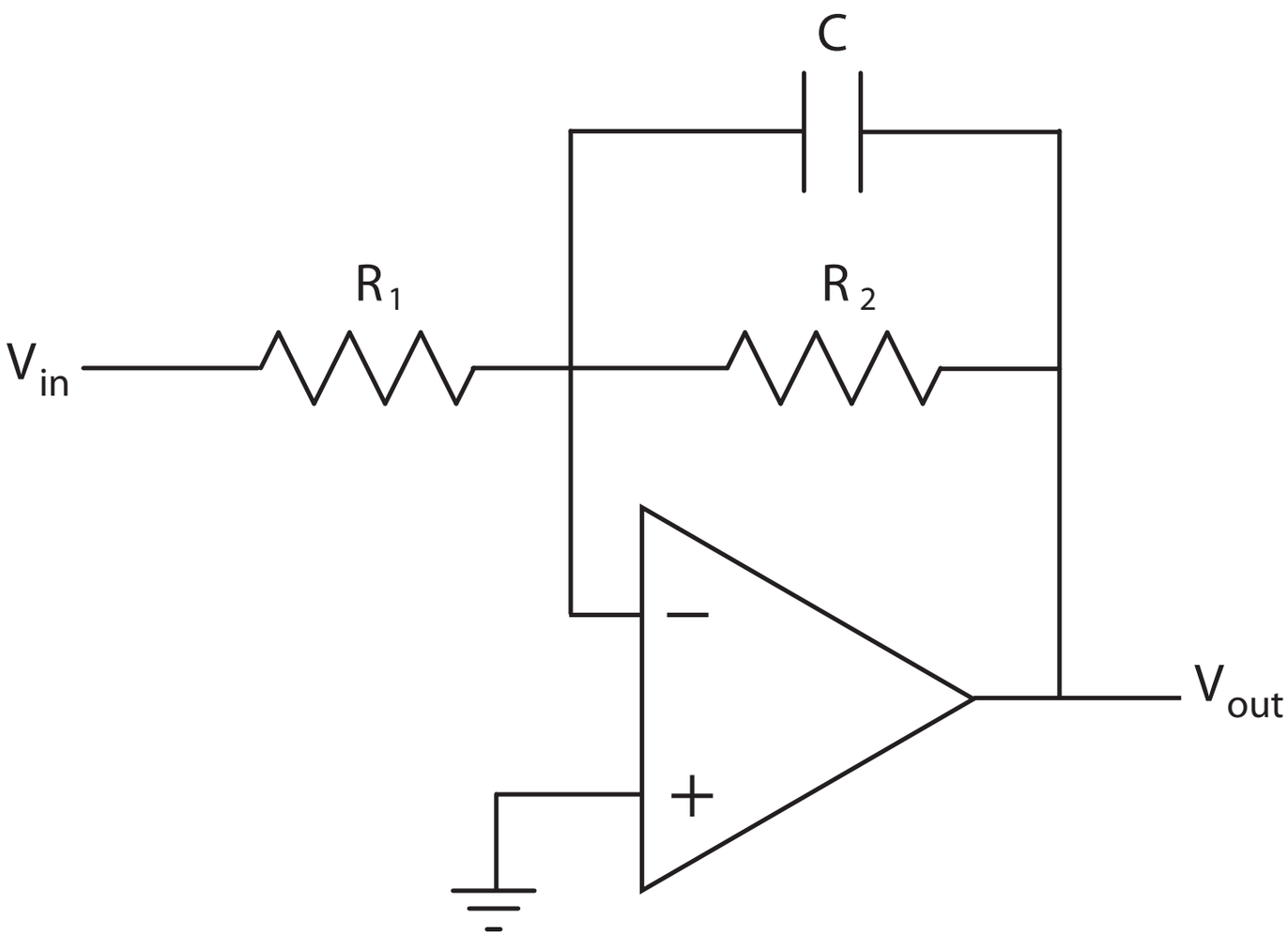

$$f_c = \frac{1}{2\pi R_2 C}$$

Sallen-Key active low-pass filter

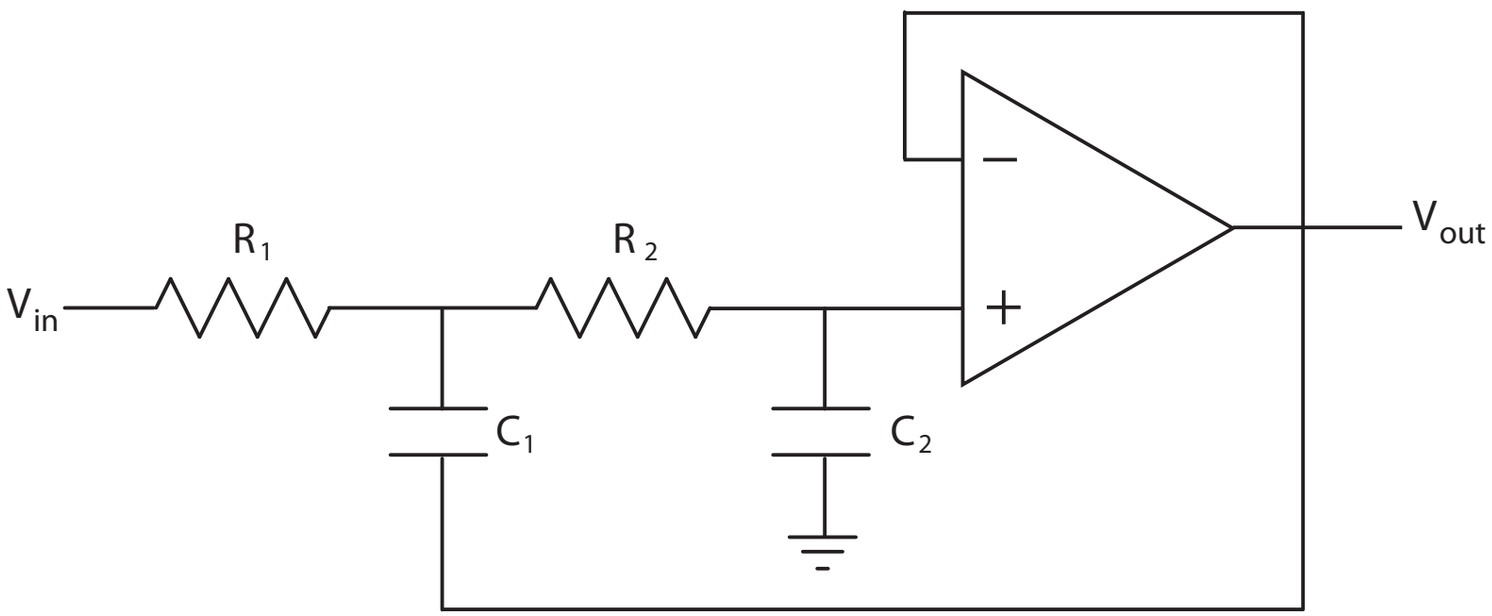

second-order low pass

attenuates at 40 dB / decade above cutoff

adjustable sharpness (Q)

$$f_c = \frac{1}{2\pi\sqrt{R_1 C_1 R_2 C_2}}$$

$$Q = \frac{\sqrt{R_1 C_1 R_2 C_2}}{C_2(R_1 + R_2)}$$

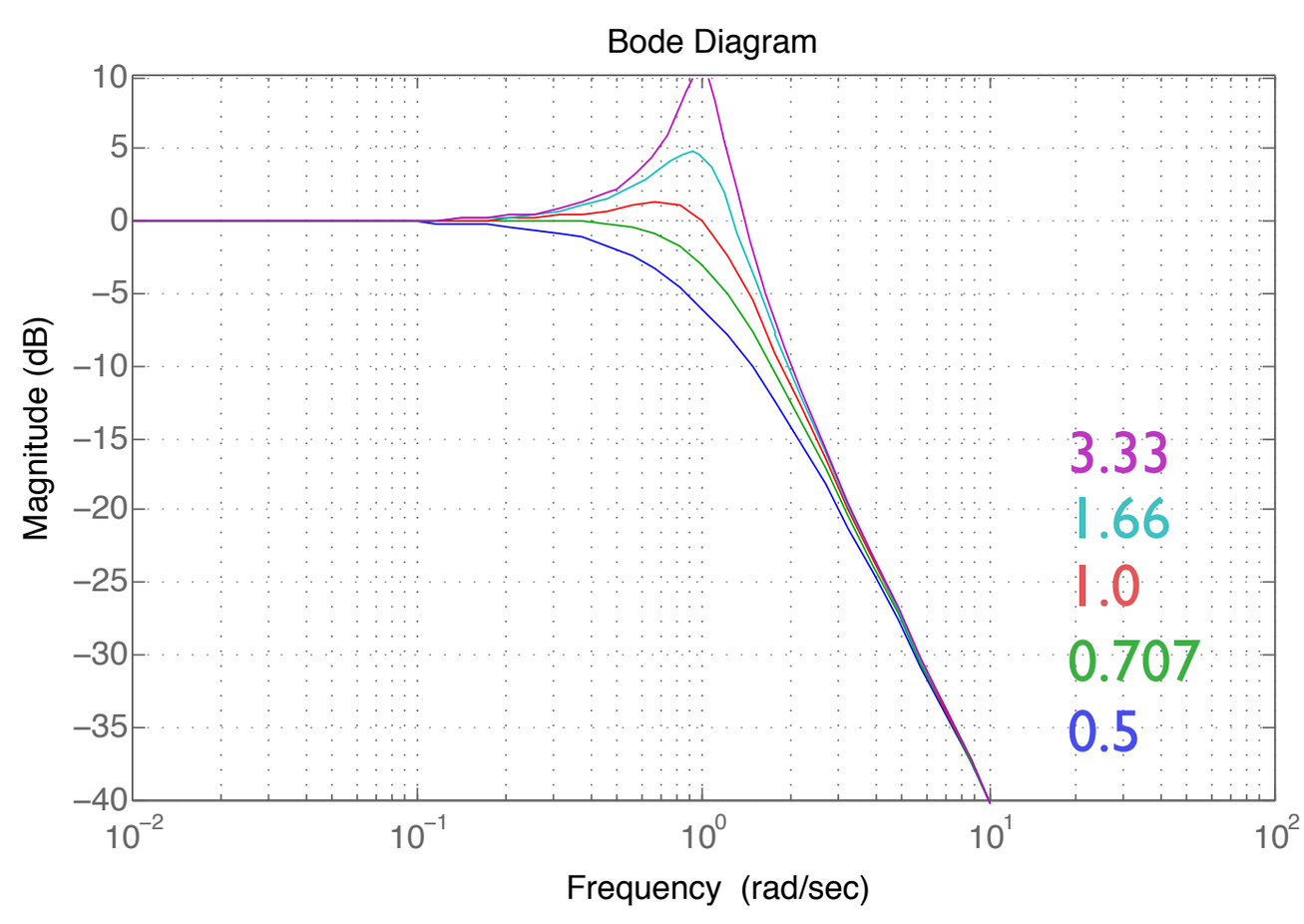

maximum flatness at Q = 0.707 (“butterworth”)

Sallen-Key active high-pass filter

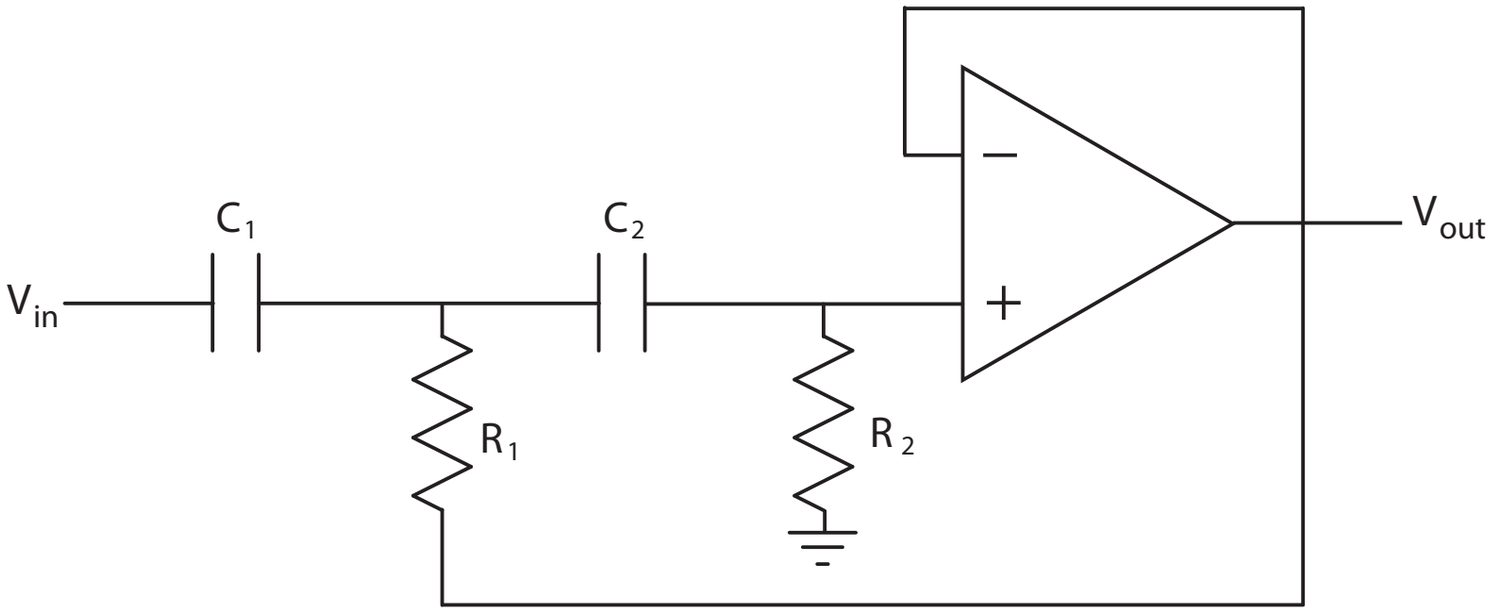

second-order high pass

attenuates at 40 dB / decade before cutoff

adjustable sharpness (Q)

$$f_c = \frac{1}{2\pi\sqrt{R_1 C_1 R_2 C_2}}$$

$$Q = \frac{\sqrt{R_1 C_1 R_2 C_2}}{C_2(R_1 + R_2)}$$

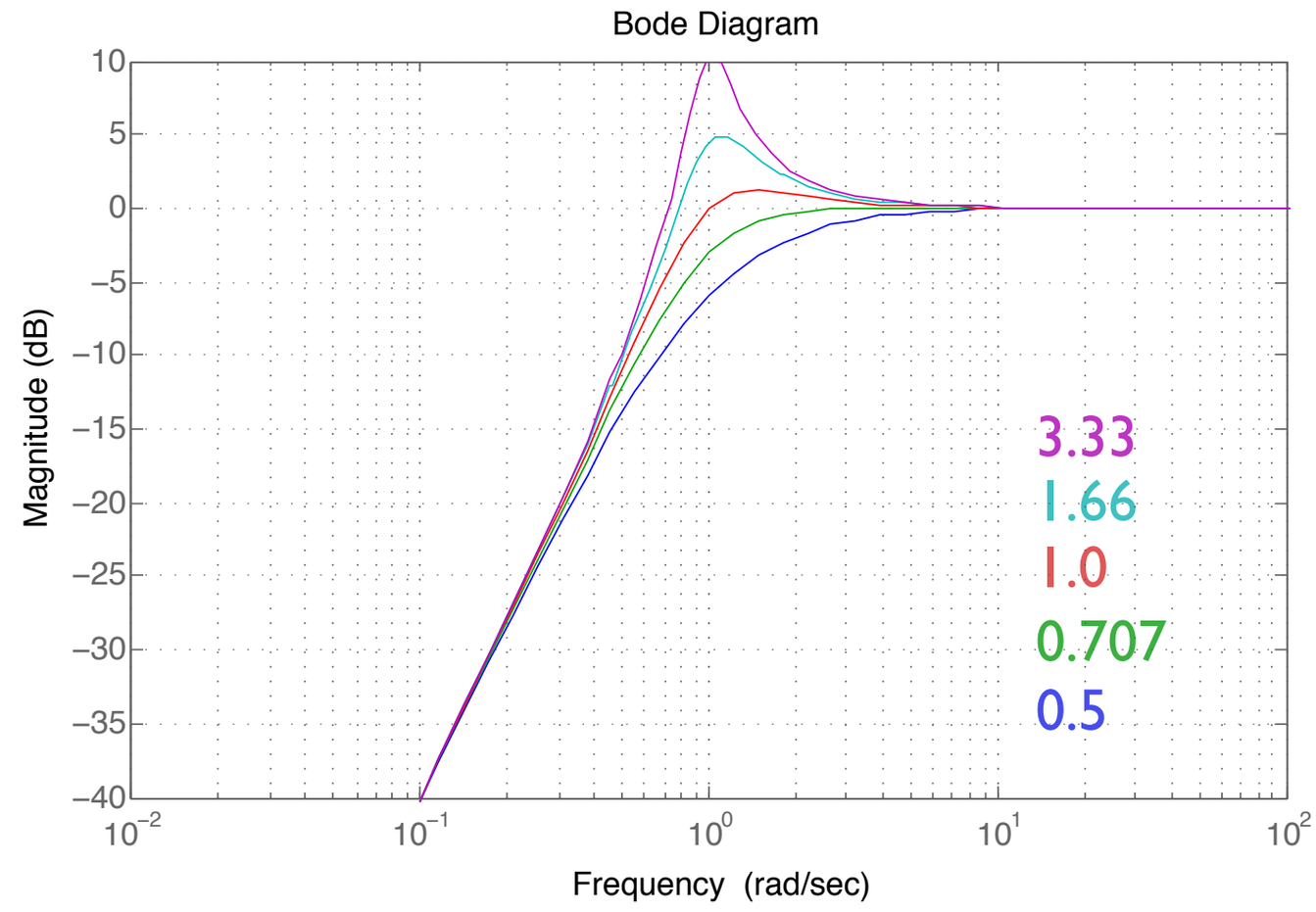

maximum flatness at Q = 0.707 (“butterworth”)

active “Twin-T” notch filter

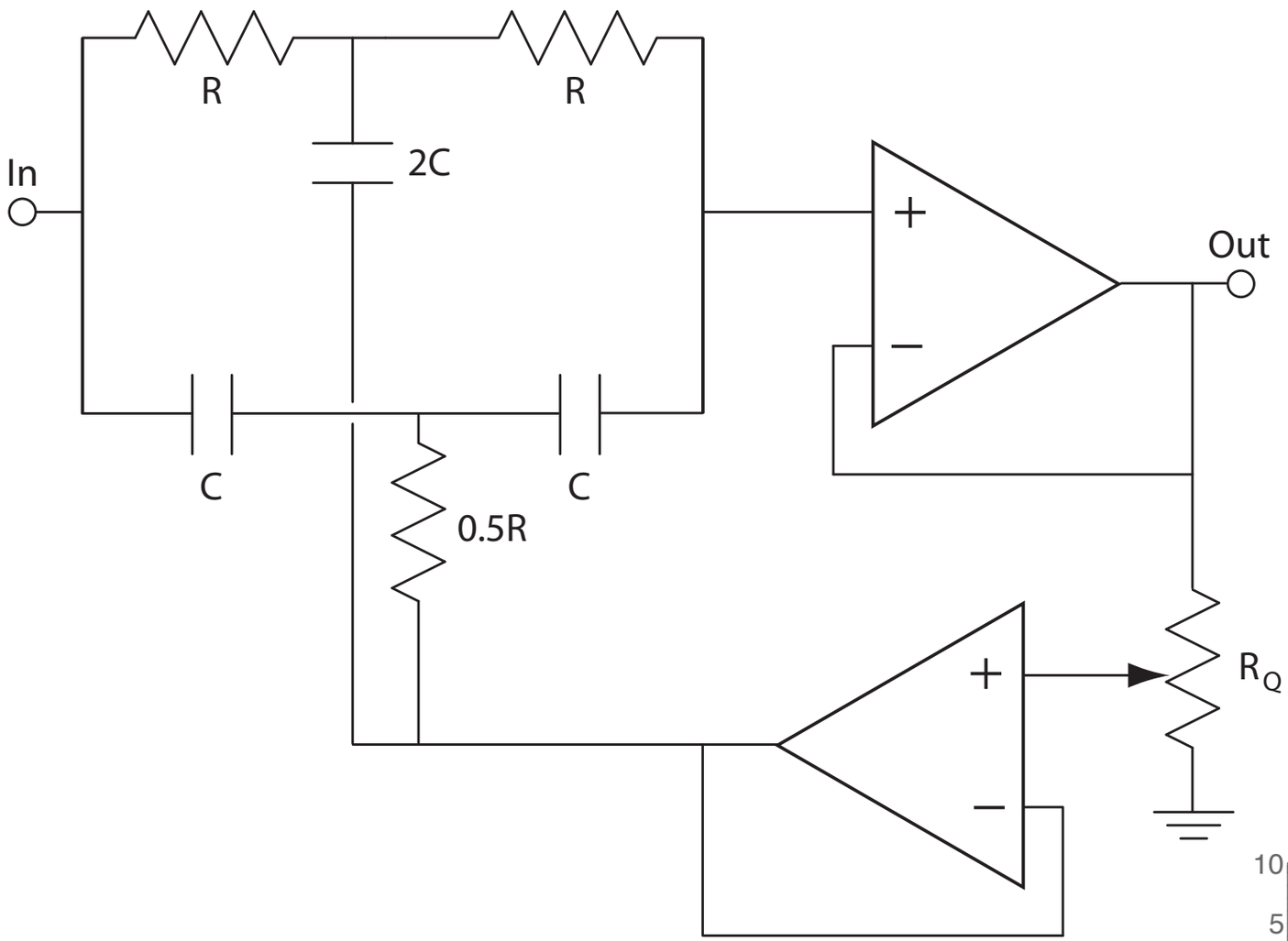

introduce feedback

adjustable Q (sharpness)

$$f_c = \frac{1}{2\pi RC}$$

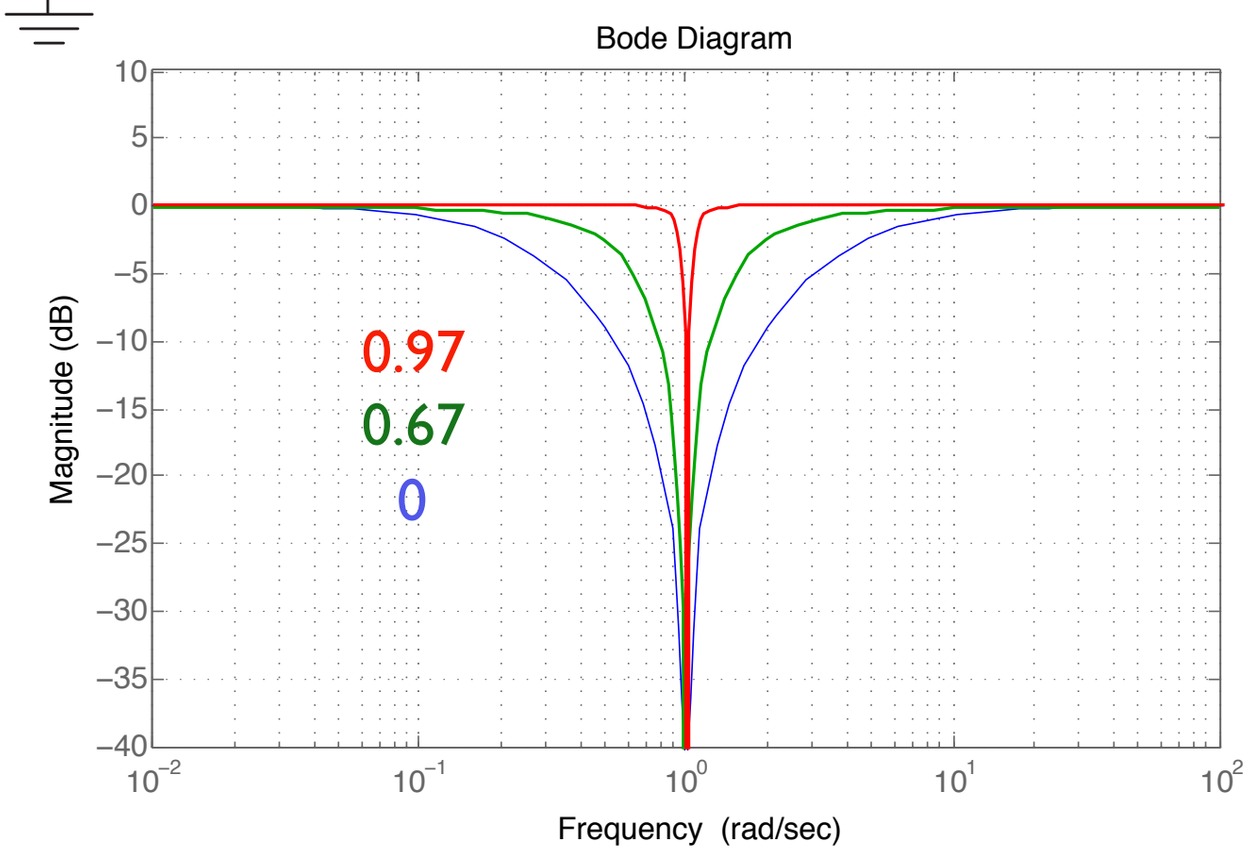

Digital Filters

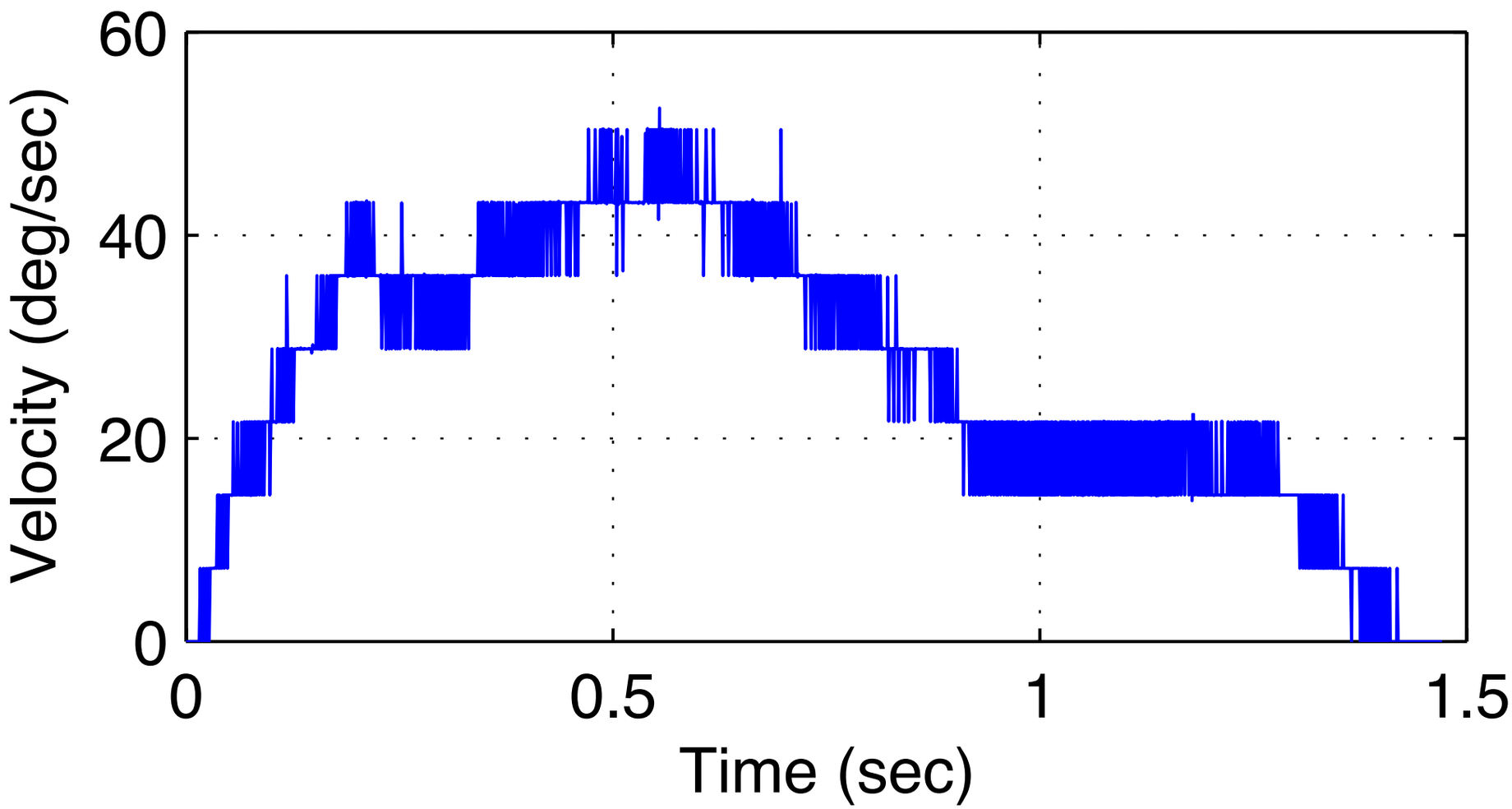

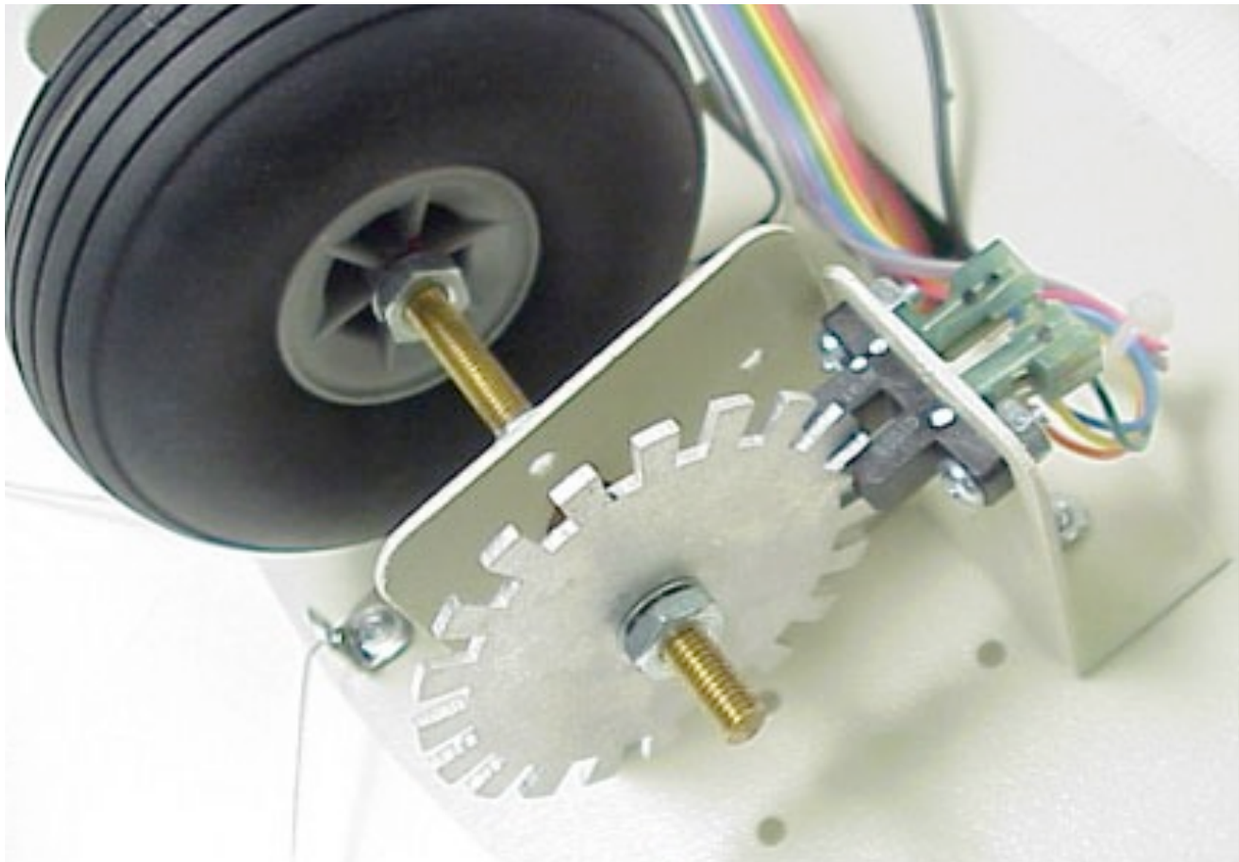

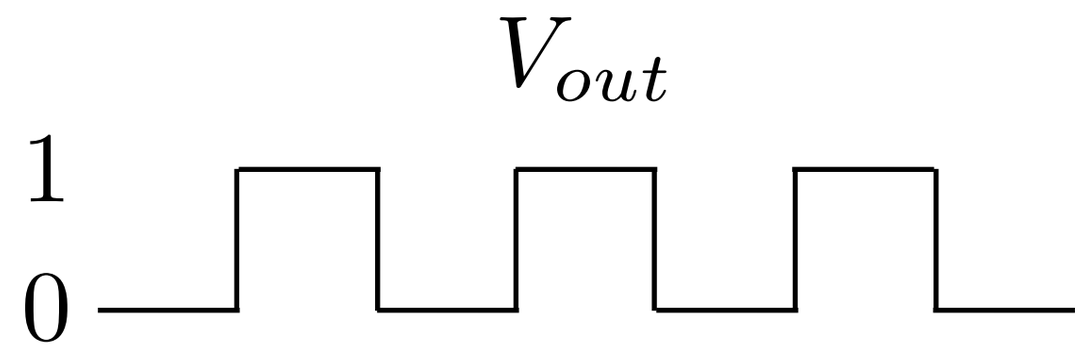

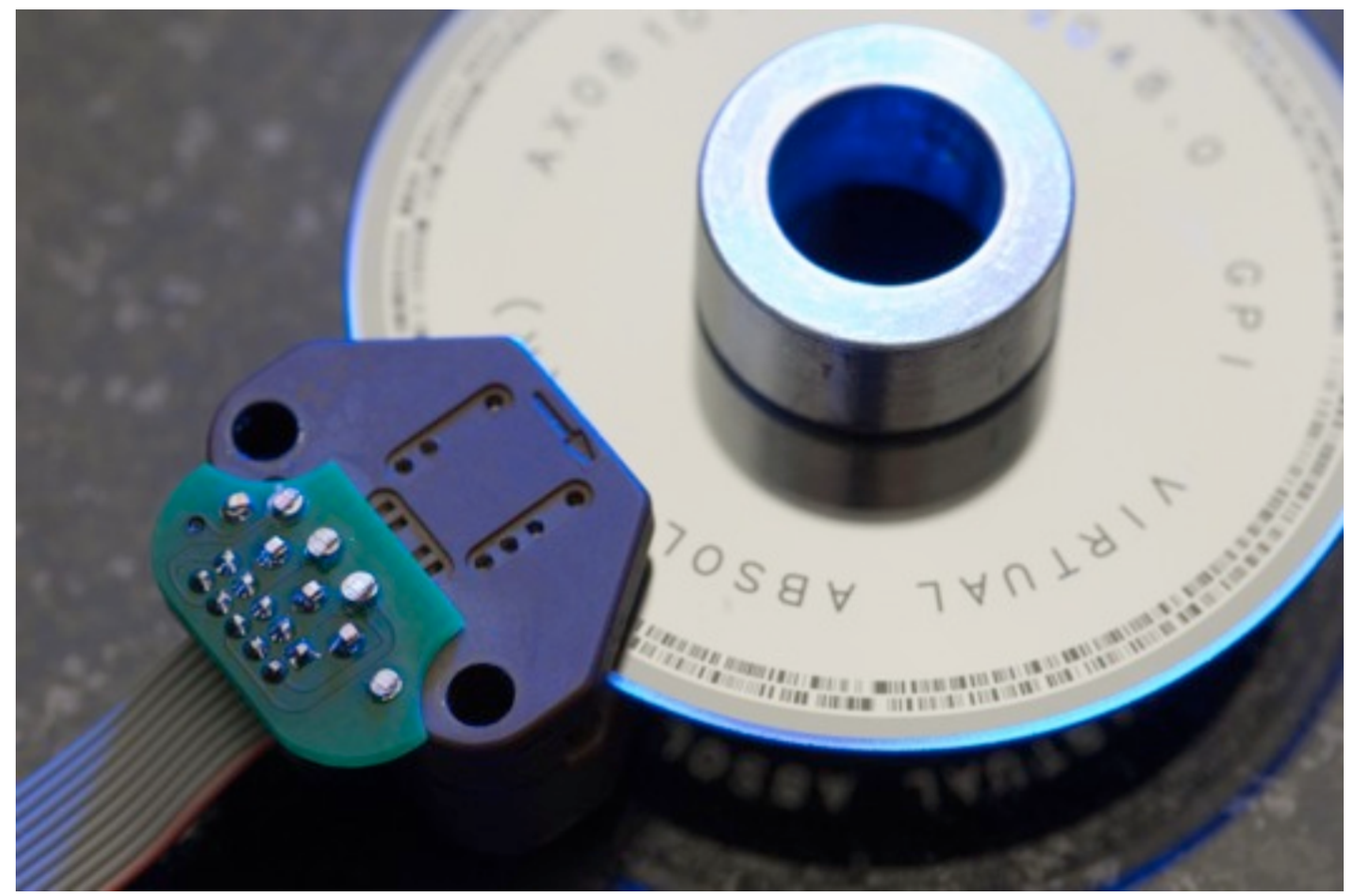

Infinite horizon (first-order low-pass) filter

$$\hat{v}_i = \beta \hat{v}_{i-1} + (1-\beta) v_i$$

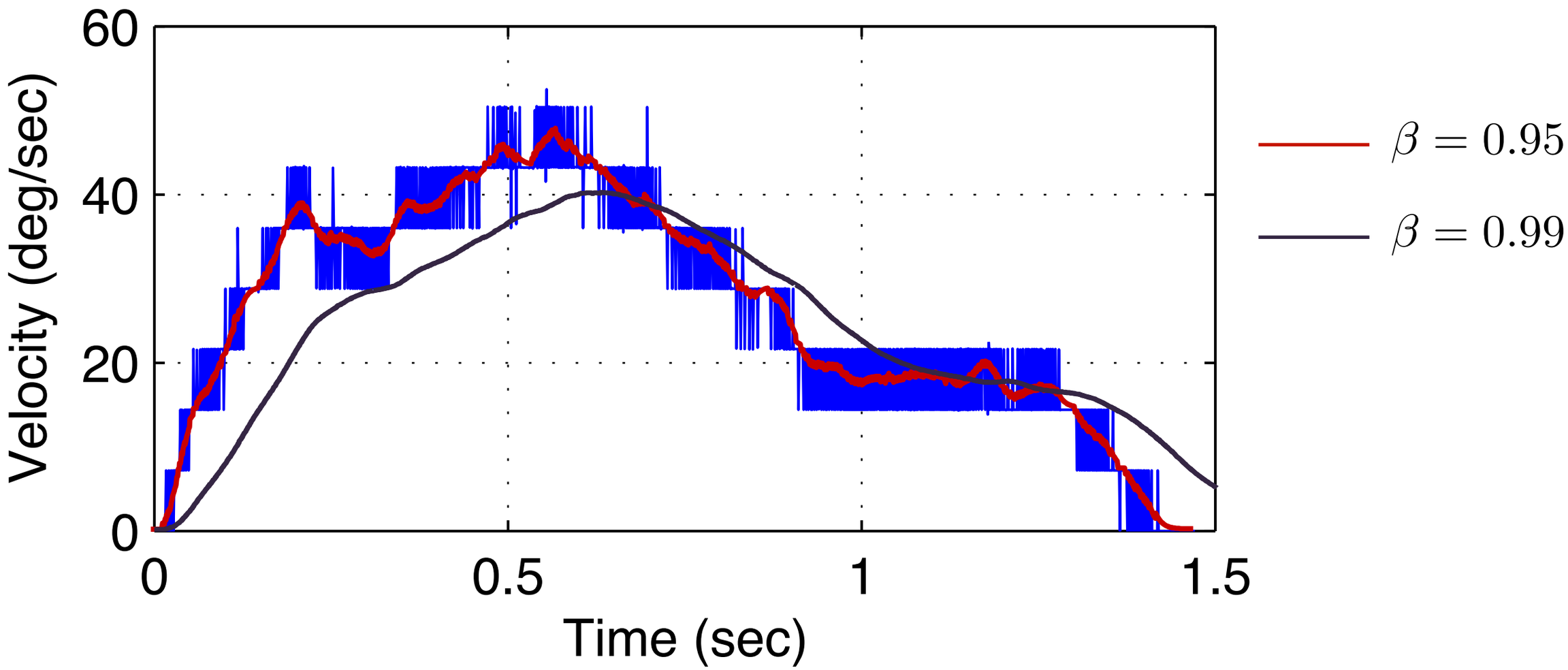

Equivalent analog bandwidth (rad/sec)

$$f = \frac{1}{\tau} = \frac{1-\beta}{\beta \Delta t}$$

```
#define BETA 0.92
...
float angle=0;
...
while(1){
    ...
    angle = BETA*angle + (1-BETA)*ADC;
    ...
}
```